3 AUTOMATIC CROSSING GATES

SECTION 3

Automatic Crossing Gates

CONTENTS

	Page No.
General Information	3-2 to 3-7
Model 10 Highway Crossing Gate Signal Complete	3-8 to 3-12
Model 10 Highway Crossing Gate Signal Parts	
Roadway Arms	3-14 to 3-23
Sidewalk Arms	3-24 to 3-27
Hinged-Tongue Roadway Arms	3-28
Buffer Leg	3-29
Gate Lights	3-30 & 3-31
Gate Arm Supports	3-32
Mechanism Supports	3-33
Gate and Counterweight Arms	3-34 to 3-36
Junction Box Cross Arm	3-37 to 3-45
Junction Box Clamp Base	3-46 & 3-47
Supporting Brackets	3-48 & 3-49
Extension Brackets	3-50
Gate Mechanism 3567	3-101 to 3-111
Gate Mechanism 3568	3-115 to 3-125

WESTERN RAILROAD SUPPLY COMPANY

DIVISION OF WESTERN INDUSTRIES, INC.

MANUFACTURERS & DISTRIBUTORS

GENERAL OFFICES and FACTORY

2742 WEST 36TH PLACE CHICAGO, ILL. 60632

2M/1967

PRINTED IN U.S.A.

GENERAL

Model 10 Signals meet, in every respect, the specifications and requirements of the Association of American Railroads, Communication and Signal Section, and of every State having specifications or regulations applying to grade-crossing protection, as well as those of the Board of Transport Commissioners for Canada.

They are especially designed for automatic control by approaching trains and for manual supervision imposed upon automatic control.

Suggested circuits for the automatic control of Model 10 Signals are shown in the instruction booklets. These follow the principles and recommended practices of the Association of American Railroads, Communication and Signal Section, and embody the use only of relays and other devices meeting the specifications and requirements of that organization.

Contributing largely to the instant success of the automatic operation of the Model 10 Signal, when first introduced in June, 1936, was the provision of a prewarning by flashing lights for a period of 3 to 5 seconds before the gate arm starts to descend and the slow, even descent of the gate arm to the horizontal position in a period of 10 to 15 seconds. Even when these signals are manually controlled this prewarning period is retained. This allows ample time for highway traffic to pass the gate after the lights start to flash, or to come to a stop before reaching the gate.

The three electric lights on the gate arm provide an arrestive, highly visible horizontal row of lights in the path of approaching highway vehicles. At all times when the gate arm is in a position to obstruct traffic the tip light burns steadily and the other two lights are caused to alternately flash in unison with the flashing lights on the signal mast.

Many variations from the typical circuits are used to meet local conditions, including timing circuits to adjust the warning period to the speed of approaching trains and thus to limit the time the gates would be down for slower trains. Circuits are frequently introduced to prevent obstruction of highway traffic by trains standing near the crossing, as occurs during station stops.

Assistance in the design of control circuits to meet special conditions will be gladly given by our Engineers, upon request.

MODEL 10 SIGNALS

The Model 10 Signal assemblies, for which ordering reference data is given in this catalog section, are those most commonly used to meet the conditions encountered in the vast majority of locations. Special assemblies can be arranged to meet various unusual requirements. These may include extension brackets to position the flashing lights so as to project the light beams along side streets, or other necessary features required by the circumstances.

In standard Model 10 Signal assemblies the signs, flashing lights and mechanism are mounted on one 5 inch pipe mast with junction-box type base and a bell or pinnacle. Where cantilever type flashing light signals are required, the gate mechanism and gate arm are frequently mounted on a separate short mast located between the cantilever signal and the track, often on a common concrete foundation. However, where clearance does not permit this arrangement, assemblies with offset cantilever brackets are supplied.

Our Engineering Department is at all times glad to cooperate in the design of special assemblies to meet unusual conditions. Given scale plans or details of a crossings, where standard assemblies do not meet the requirements, we will furnish drawings illustrating the arrangement recommended.

MECHANISMS

Two types of mechanism are available for operation of roadway gate arms, as illustrated on Pages 3-8 & 3-9. Both Types 3567 and 3568 are designed to operate the gate arm to the clear, 90°, position by power and from the clear position to the 45° position, descending, by power and from the 45° position to the horizontal position by gravity. The characteristics and a full description of the mechanisms will be found in Instruction Booklet accompanying each mechanism.

Each of the above mechanisms may be had with a kit for the operation of a sidewalk arm. This sidewalk arm operating shaft and internal actuating parts is supplied as a kit, which can be easily installed.

All mechanisms are provided with auxiliary circuit controller contacts for indication of gate arm position, for flashing and gate arm light control, to stop the bell from ringing after the gate arm is down, etc.

The same gate arms and fittings are used with either Type 3567 or Type 3568 mechanism. The counterweight and gate support arms for roadway arms attach to the splined mechanism shaft. The sidewalk arm support casting, when used, attaches to a square end shaft.

COUNTERWEIGHTING AND GATE ARM TORQUE

These mechanisms are of the powered-down type, but the counterweights supplied with each Model 10 Signal are of correct weight to provide down torque required for proper operation of the gate arm from clear to horizontal position by gravity. The counterweights and mounting arrangement are so designed that they may be adjusted as required, without dismantling, to obtain horizontal and clear position torque values as required for each arm length.

Proper counterweighting and torque values are essential elements of Model 10 Signal design. Recommended torque values based on experience, tests and calculations of wind resistance, for gate arms of various lengths, are given in tables in instruction booklets furnished with each mechanism.

Speed Table For Crossing Signal Starts

Seconds		10	15	20	25	30	35	40	45	50	55	60
Miles Per Hour	Feet Per Second	Distance Traveled in Feet										
1	1.46	14.6	22.0	29.3	36.6	44.0	51.3	58.6	66.0	73.3	80.6	88.0
2	2.93	29.3	44.0	58.6	73.3	88.0	102.6	117.3	132.0	146.6	161.3	176.0
3	4.4	44	66	88	110	132	154	176	198	220	242	264
4	5.86	58.6	88	117.3	146.6	176	205.3	334.6	264	293.3	322.6	352
5	7.3	73	110	147	183	220	257	293	330	367	403	440
10	14.6	146	220	293	366	440	513	587	660	733	807	880
15	22.0	220	330	440	550	660	770	880	990	1,100	1,210	1,320
20	29.3	293	440	587	733	880	1,027	1,173	1,320	1,467	1,613	1,760
25	36.7	367	550	733	917	1,100	1,283	1,467	1,650	1,833	2,017	2,200
30	44.0	440	660	880	1,100	1,320	1,540	1,760	1,980	2,200	2,420	2,640
35	51.3	513	770	1,027	1,283	1,540	1,797	2,053	2,310	2,567	2,823	3,080
40	58.7	587	880	1,173	1,467	1,760	2,053	2,347	2,640	2,933	3,227	3,520
45	66.0	660	990	1,320	1,650	1,980	2,310	2,640	2,970	3,300	3,630	3,960
50	73.3	733	1,100	1,467	1,833	2,200	2,567	2,933	3,300	3,667	4,033	4,400
55	80.7	807	1,210	1,613	2,017	2,420	2,823	3,227	3,630	4,033	4,437	4,840
60	88.0	880	1,320	1,760	2,200	2,640	3,080	3,520	3,960	4,400	4,840	5,280
65	95.3	953	1,430	1,907	2,383	2,860	3,337	3,813	4,290	4,767	5,243	5,720
70	102.7	1,027	1,540	2,053	2,567	3,080	3,593	4,107	4,620	5,133	5,647	6,160
75	110.0	1,100	1,650	2,200	2,750	3,300	3,850	4,400	4,590	5,500	6,056	6,600
80	117.3	1,173	1,760	2,347	2,933	3,520	4,107	4,693	5,280	5,867	6,453	7,040
85	124.7	1,247	1,870	2,493	3,117	3,740	4,363	4,987	5,610	6,233	6,858	7,480
90	132.0	1,320	1,980	2,640	3,300	3,960	4,620	5,280	5,940	6,600	7,260	7,920
95	139.3	1,393	2,090	2,787	3,483	4,180	4,877	5,573	6,270	6,967	7,663	8,360
100	146.7	1,467	2,200	2,933	3,667	4,400	5,133	5,867	6,600	7,333	8,067	8,800
105	154.0	1,540	2,310	3,080	3,850	4,620	5,390	6,160	6,930	7,700	8,470	9,240
110	161.3	1,613	2,420	3,227	4,033	4,840	5,647	6,453	7,260	8,067	8,873	9,680
115	168.6	1,686	2,530	3,373	4,217	5,060	5,903	6,747	7,590	8,434	9,277	10,120
120	176.0	1,760	2,640	3,520	4,400	5,280	6,160	7,040	7,920	8,800	9,680	10,560
125	183.3	1,833	2,750	3,667	4,583	5,500	6,417	7,334	8,250	9,167	10,084	11,000
130	190.7	1,907	2,860	3,813	4,767	5,720	6,673	7,627	8,580	9,534	10,487	11,440

NOTE: Where length of track circuit is known, time in seconds can be determined by dividing its length by "Feet Per Second" at train speed selected.

* Does not allow for drop-away time of relays.

Information Desired With Inquiry For Complete Model 10 Signal Installation

We are pleased to furnish engineering information and to quote on all materials required for installations of Model 10 Signals. Where possible, inquiries should be accompanied by a sketch or scale track plan showing location of highway.

The following information is especially desired:

1. Width of roadway or length of roadway gate arm required.
2. If sidewalk arm is required, length thereof.
3. Length of approach track circuit required each side of highway to provide 20 seconds warning for fastest train, or information as to speeds of trains operated over the crossing.
4. If for double track road, specify if protection shall be provided for reverse traffic.
5. What special operating conditions exist within the area?
6. Details of any switches within the approach sections.
7. Circuits of any signaling now in place which will be affected by the installation of crossing protection.
8. Whether diesel or electric propulsion railroad.
9. What electric power is available at crossing?
10. Weight and type of rail, whether four or six hole splice bars and rail drilling.
11. Type of track ballast (rock, gravel, cinders or other material).
12. Type of highway surface or pavement.
13. If electric propulsion railway, specify what propulsion voltage is used and whether A.C. or D.C. If A.C., specify frequency.
14. If electric propulsion railway, state the normal and maximum return current in rails.
15. If electric propulsion railway, specify if single rail or two rail track circuits are preferred.
16. Whether spare space on pole line is available for extending electric power to ends of track circuits.

Suggested Roadway Gate Arm Light Spacing

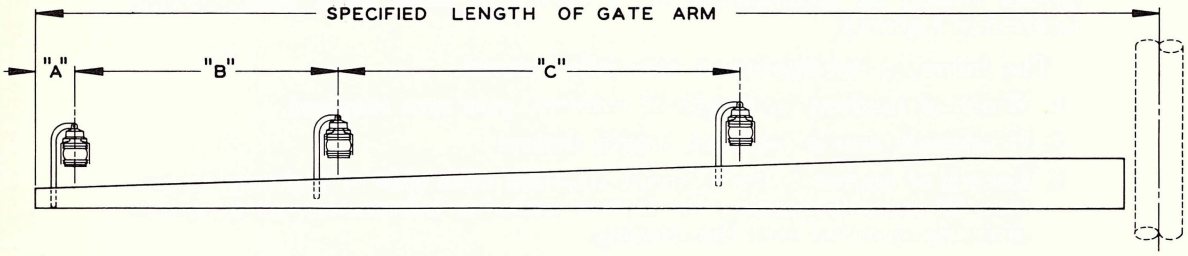

Specified Length of Gate Arm	Dimension "A"	Dimension "B"	Dimension "C"
14 Ft.	6″	36″	5′–0″
15 Ft.	18″	36″	5′–0″
16 Ft.	24″	36″	5′–0″
17 Ft.	24″	36″	5′–0″
18 Ft.	28″	41″	5′–0″
19 Ft.	28″	41″	5′–0″
20 Ft.	28″	4′–0″	5′–0″
21 Ft.	28″	4′–0″	5′–0″
22 Ft.	28″	4′–0″	5′–0″
23 Ft.	28″	4′–0″	5′–0″
24 Ft.	28″	5′–0″	5′–0″
25 Ft.	28″	5′–0″	5′–0″
26 Ft.	28″	5′–0″	5′–0″
27 Ft.	28″	5′–0″	5′–0″
28 Ft.	28″	5′–0″	5′–0″
29 Ft.	36″	6′–0″	6′–0″
30 Ft.	36″	6′–0″	6′–0″
31 Ft.	36″	6′–0″	6′–0″
32 Ft.	36″	7′–6″	7′–6″
33 Ft.	36″	7′–6″	7′–6″
34 Ft.	36″	7′–6″	7′–6″
35 Ft.	36″	9′–0″	9′–0″
36 Ft.	36″	9′–0″	9′–0″
37 Ft.	36″	9′–0″	9′–0″
38 Ft. and Over	36″	10′–0″	10′–0″

Suggested Foundation Designs For Model 10 Signals Using No. 2149-11 Junction Box Type Base

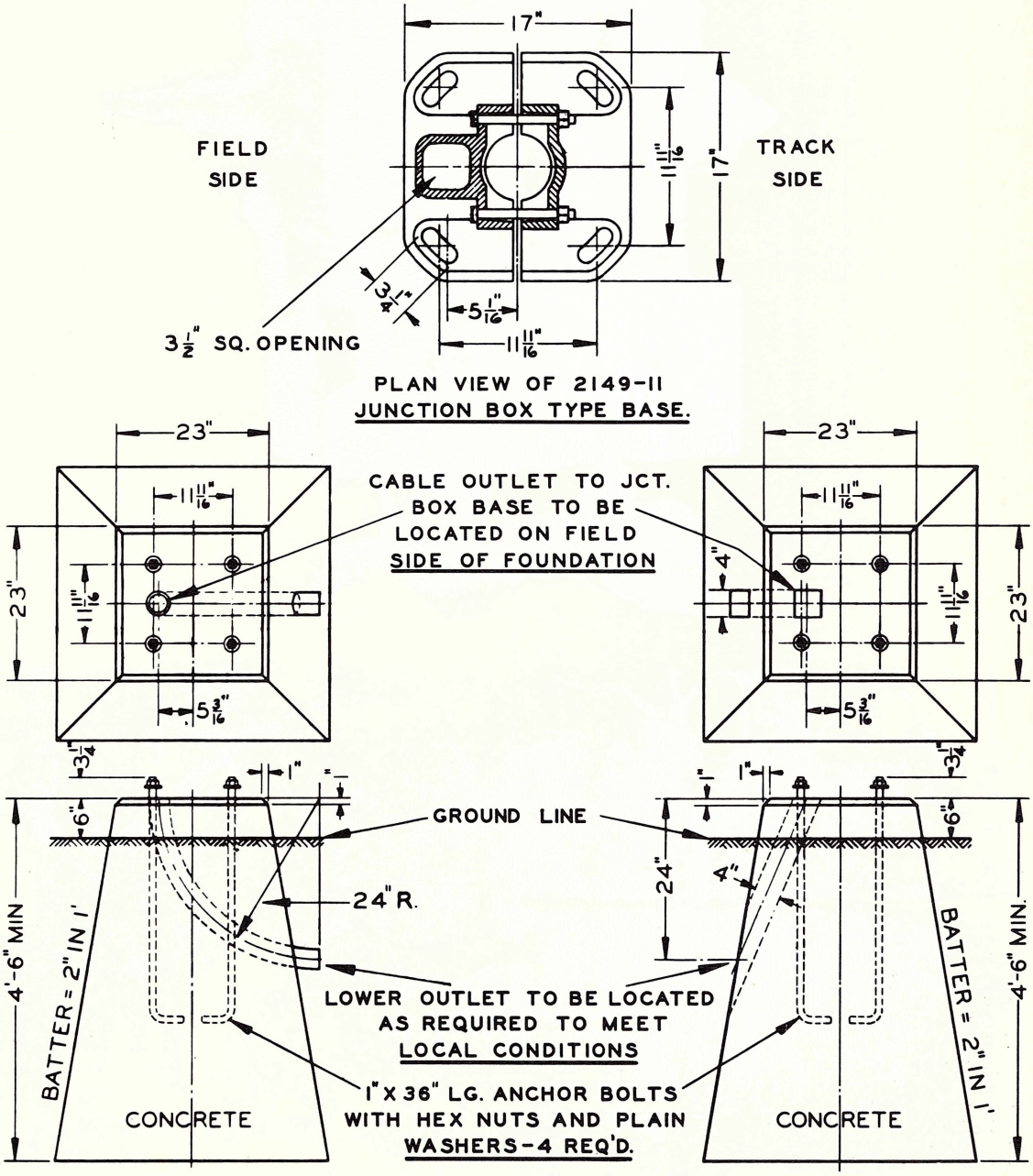

Model 10 Signal Mechanism

No. 3567-131

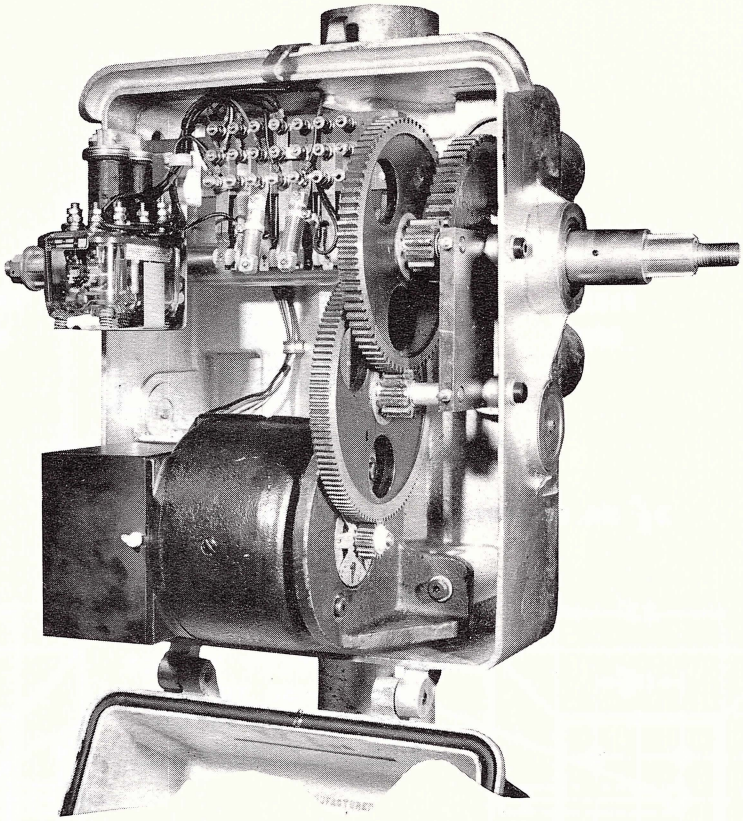

Model 10 Signal Mechanism

No. 3568-132 (With Sidewalk Shaft)

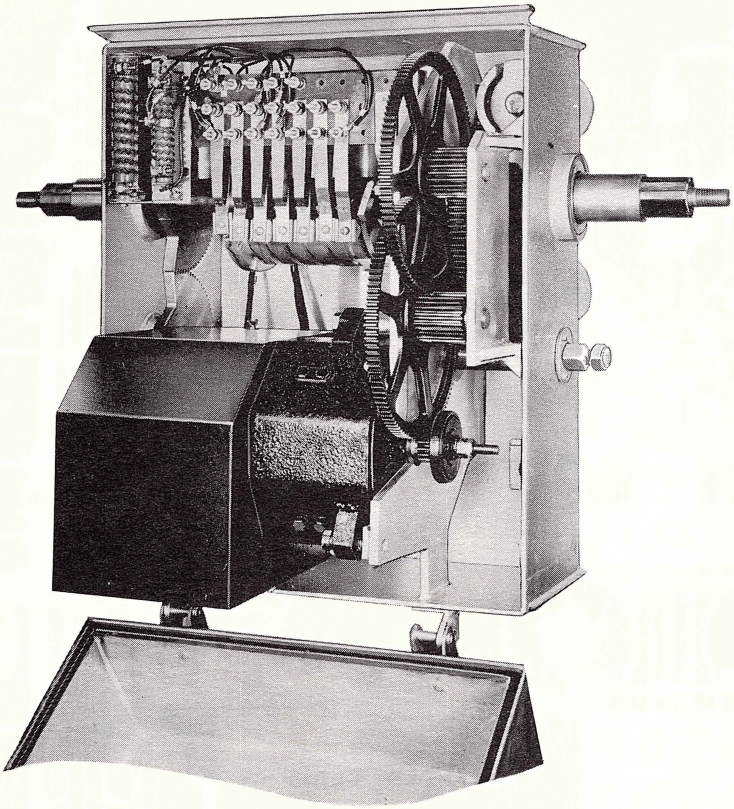

Model 10 Signal Assembly
For Roadway Arms 14' to 38'

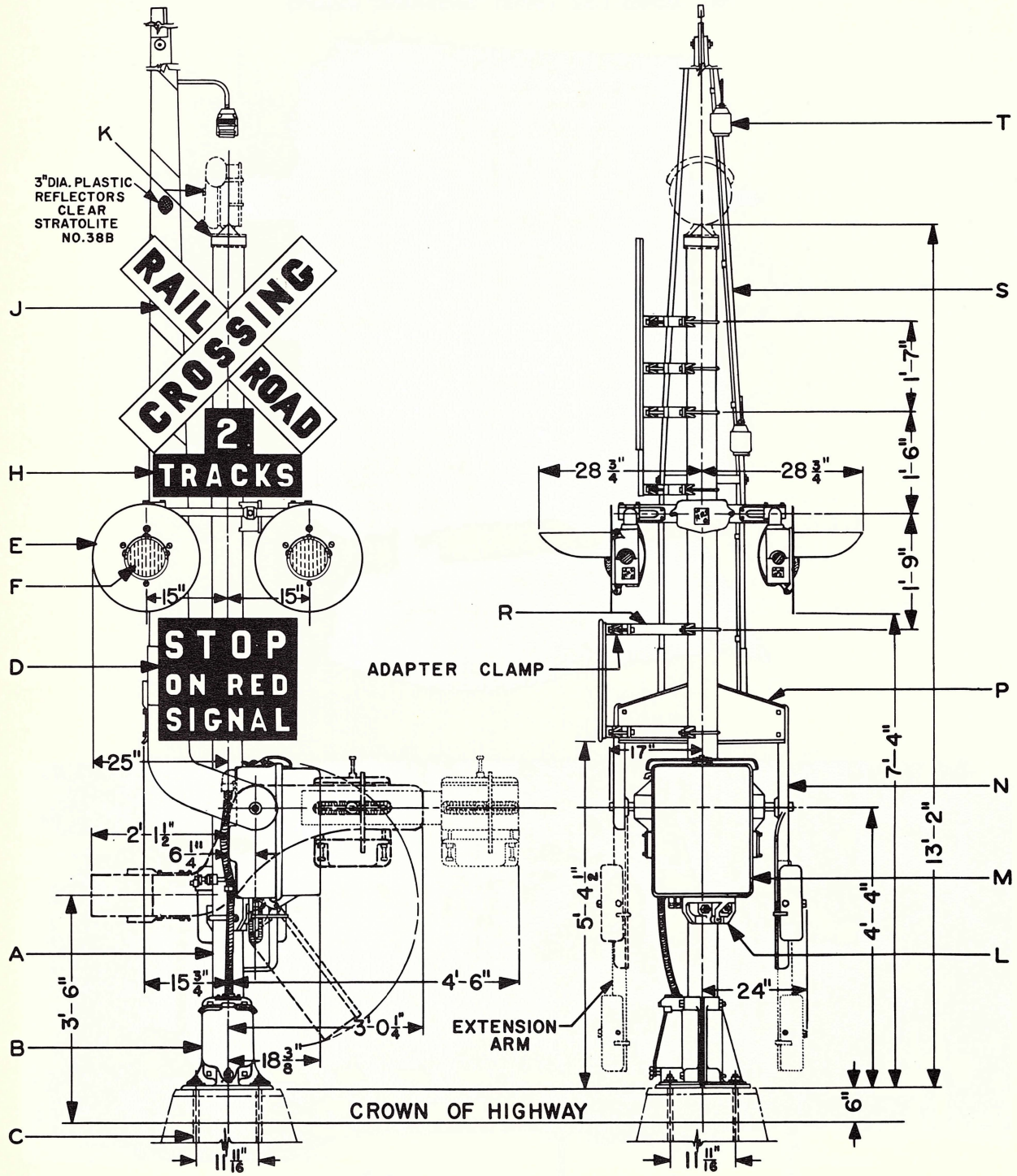

ASSEMBLY WITH 18'-24' ARMS PER —— LINES
ASSEMBLY WITH 25'-30' ARMS PER ---- LINES
ASSEMBLY WITH 31'-38' ARMS PER ····· LINES

Ref. A or Ref. B

Assembly drawings of Model 10 Signals with roadway arm 39' to 44' in length will be furnished on request.

Model 10 Signal Assembly With Sidewalk Arm For Roadway Arms 14' to 38'

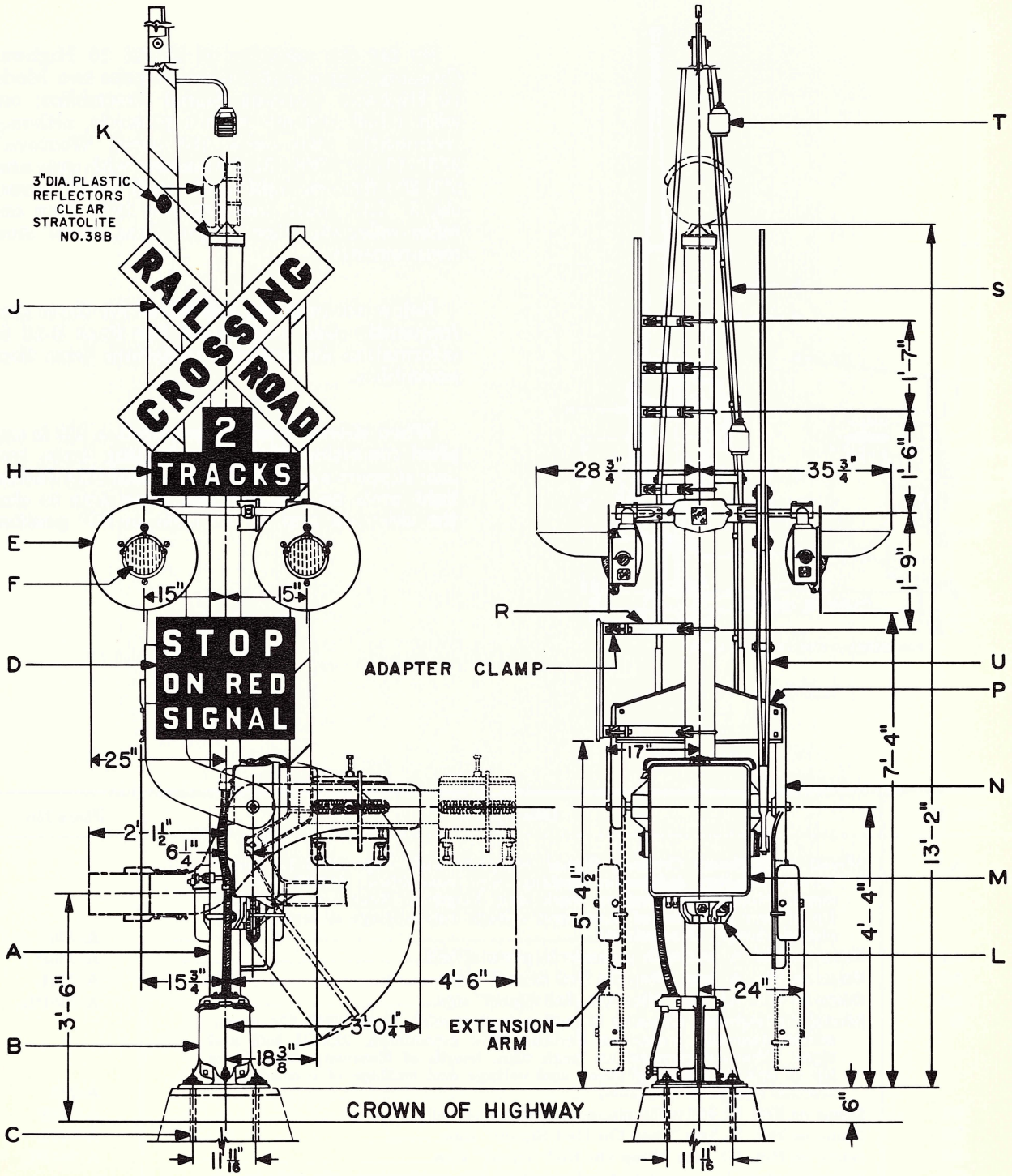

ASSEMBLY WITH 18'-24' ARMS PER —— LINES
ASSEMBLY WITH 25'-30' ARMS PER ---- LINES
ASSEMBLY WITH 31'-38' ARMS PER ····· LINES

Ref. A or B with Ref. C

Assembly drawings of Model 10 Signals with roadway arm 39' to 44' in length will be furnished on request.

Model 10 Signal Assembly

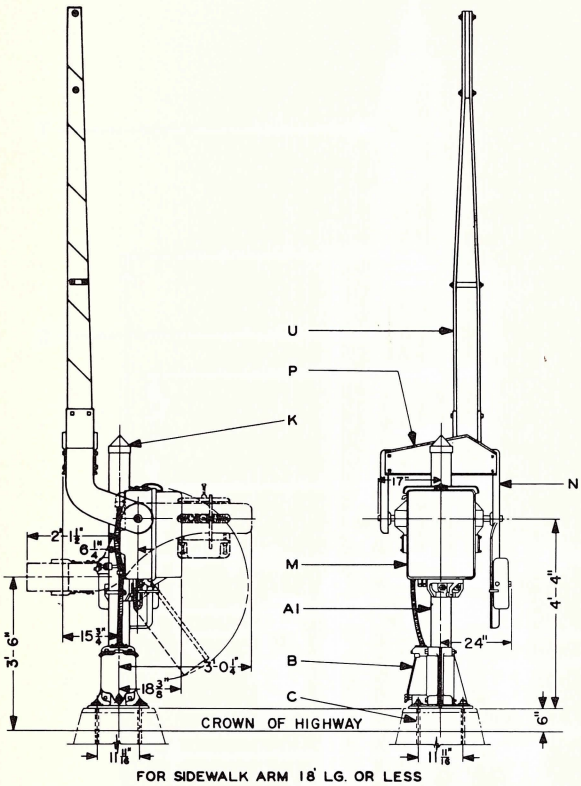

Ref. D

By far the majority of Model 10 Highway Crossing Signal installations require two Model 10 Highway Crossing Signal Assemblies; one with a bell and one with a pinnacle, although frequently two bells are used. Western's 3567-131 or 3568-131 mechanism with gate arm, 970-204 flashing light units, with 5323P roundels, 5″ I.D. mast, junction box type base and reflex-reflecting sheet type signs, meet most requirements.

Below are ordering references for these most frequently used assemblies. See Page 3-13 for information for ordering variations from these assemblies.

When sidewalk arm is required, a kit is supplied consisting of shaft, actuating parts, arm, arm support and brackets for mounting flashing light units on junction box cross arm to clear the sidewalk arm in the clear or 90° position.

Ref. No.	Description	Piece No.
A	Model 10 Highway Crossing Signal, complete with Type 3567-131 mechanism, two-way indication flashing light assemblies, 222CR bell and signs. (Specify numeral on track sign, length of Roadway Arm, from tip of arm to center of mast, and voltage and wattage of incandescent electric lamps, if required)	A-735
A1	Same as Ref. A, but with pinnacle in place of bell	A-735P
A2	Same as Ref. A, less "Stop On Red Signal" sign	A-735L
A3	Same as Ref. A1, less "Stop On Red Signal" sign	A-735PL
B	Model 10 Highway Crossing Signal, complete with Type 3568-131 mechanism, two-way indication flashing light assemblies, 222CR bell and signs. (Specify numeral on track sign, length of Roadway Arm, from tip of arm to center of mast, and voltage and wattage of incandescent electric lamps, if required)	A-741
B1	Same as Ref. B, but with pinnacle in place of bell	A-741P
B2	Same as Ref. B, less "Stop On Red Signal" sign	A-741L
B3	Same as Ref. B1, less "Stop On Red Signal" sign	A-741PL
C	Sidewalk Arm kit complete for Type 3567-131 mechanism. (Specify length of arm)	3567-140
C1	Same as Ref. C, but for Type 3568-131 mechanism	3568-140
D	Sidewalk Gate Assembly, complete with Type 3567-131 mechanism	A-743
D1	Same as Ref. D, but with Type 3568-131 mechanism	A-744
	See Page 3-13 for information for ordering commonly used variations.	

Model 10 Signal Assembly

When ordering assemblies other than are shown on Pages 3-10 to 3-12 please use the reference data below, enumerating components required.

If extra light assemblies are called for, specify degree of angle to right or left of main lights.

We will gladly furnish plans and information for special assemblies, including supporting brackets as shown on Page 3-48 and 3-49, Marker Lights as shown on Page 1-26, etc.

Ref. No.	Description	Piece No.
A	Pipe Mast 5″ I.D. x 13′-0″ Lg.	715-24
A1	Pipe Mast 5″ I.D. x 6′-0″ Lg.	715-16
B	Base (See Pages 3-46 and 3-47)	
C	Anchor Bolts 1″ x 36″	11079
D	"Stop On Red Signal" sign (See Section 1, Pages 1-20 and 1-21)	
E	Flashing Light Assembly (See Section 1, Pages 1-15 to 1-19)	
	For Gate Assembly only (See Pages 3-37 to 3-45)	
F	Roundels (See Section 1, Page 1-14)	
G	Specify Voltage and Wattage of Lamps	
H	"Number of Tracks" sign (See Section 1, Pages 1-22 and 1-23)	
J	"Railroad Crossing" sign (See Section 1, Pages 1-24 and 1-25)	
K	Bells (See Section 5)	
	For Pinnacle (See Section 1, Pages 1-10 and 1-11)	
L	Mechanism Support (See Page 3-33 for Details)	3565-380A
M	Gate Mechanism 3567 (See Pages 1-101 to 1-111)	
M	Gate Mechanism 3568 (See Pages 1-115 to 1-125)	
N	Gate and Counterweight Arms (See Pages 3-34 and 3-35)	
P	Gate Arm Support (See Page 3-32)	
R	Extension Bracket (See Page 3-50)	
S	Gate Arm (See Pages 3-15 to 3-23)	
T	Gate Lights (See Pages 3-30 and 3-31)	
U	Sidewalk Gate Arms (See Pages 3-24 to 3-27)	
V	Sidewalk Gate Support (See Page 3-36)	
W	Gate Light Jct. Boxes (See Pages 3-14 and 3-15)	
X	Buffer Leg (See Page 3-29)	

Roadway Arms, Extendable Type

14′ MINIMUM 18′ MAXIMUM
ADJUSTABLE IN ONE-FOOT INCREMENTS

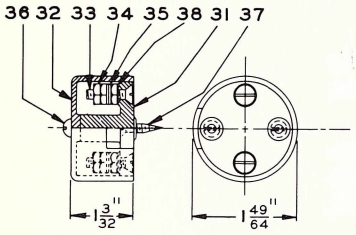

Ref. W

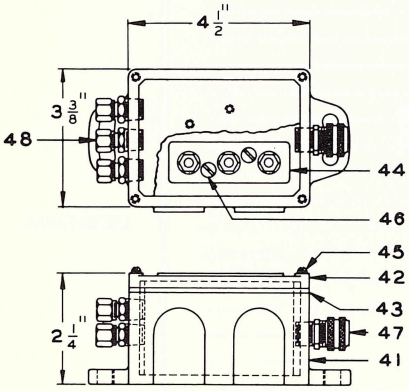

Ref. W1

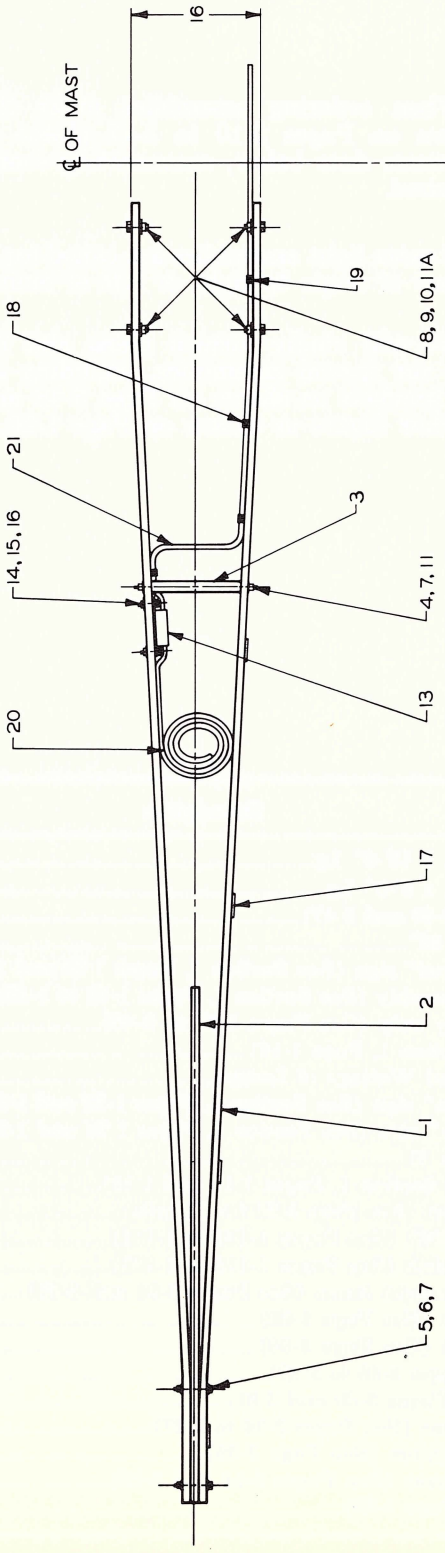

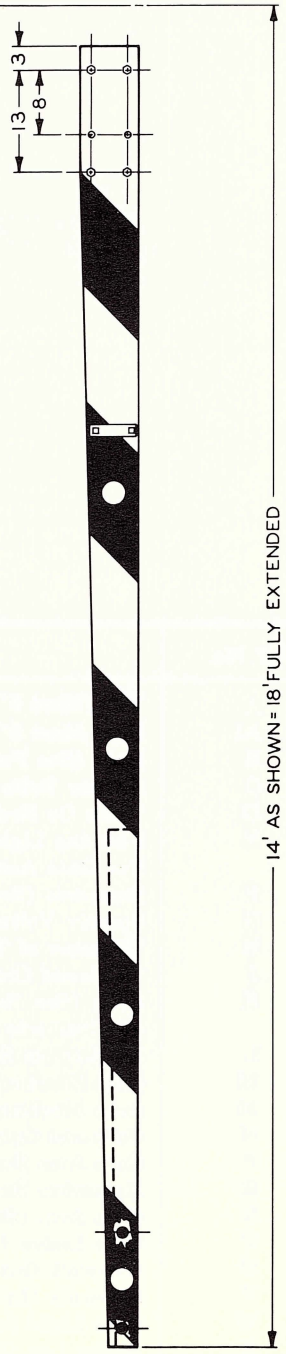

Ref. S

Roadway Arms, Extendable Type

14′ MINIMUM 18′ MAXIMUM
ADJUSTABLE IN ONE-FOOT INCREMENTS

Ref. No.	Description	Piece No.
S	Assembly of Roadway Arm with wiring and reflectors, less gate lights	3565-331
S1	Same as Ref. S, less wiring and reflectors	3565-361
S2	Wiring Harness Only. (Includes all material for wiring roadway arm for three gate lights)	3565-341
W	Type 3561 Terminal Block Complete, Bakelite	3561-196
W1	Type 3561 Junction Box Complete, Aluminum	3561-71D
	REPLACEMENTS PARTS	
1	Base Board (Specify Track or Field Side)	3565-54-13
2	Tongue	3565-52A
3	Spacer Block	3565-55
4	Through Stud	3562-66EH
5	Machine Bolt, 3/8″-16 x 3″ lg. hex. hd., stl.	
6	Washer, 7/16″ I.D. x 1½″ O.D. stl.	
7	Square Nut, 3/8″-16, stl.	
8	Machine Bolt, ½″-13 x 2″ lg., hex. hd., stl.	
9	Hex. Nut, ½″-13, stl.	
10	Spring Lock Washer, ½″, stl.	
11	Aluminum Washer Plate	3562-77A
11A	Aluminum Washer Plate	3562-71
13	Junction Box Assembly. (For Details see Ref. 41 to 48 below)	3561-71D
14	Machine Bolt, 5/16″-18 x 1¾″ lg., hex. hd., stl.	
15	Hex. Nut, 5/16″-18 x 1¾″ lg., hex. hd., stl.	
16	Washer, 5/16″ plain, stl.	
17	3″ Diameter Plastic Reflector, with mounting screws	38B
18	Aluminum Cable Clip for one 3-Conductor Cable	
19	Nylon Cable Clip for one 3-Conductor Cable	1953-7A
20	2-Conductor Cable, In Bulk	
21	3-Conductor Cable, In Bulk	
	PARTS NOT ILLUSTRATED	
22	Aluminum Cable Clip for three 2-Conductor Cables	
22A	Same as Ref. 22, but for two 2-Conductor Cables	
22B	Same as Ref. 22, but for one 2-Conductor Cable	
23	Wood Screws for above clips, No. 8 x ¾″ rd. hd., brass	
24	½″ Cable Grip, for one 3-Conductor Cable	DB-990
25	Pipe Reducer, ¾″ to ½″, for Ref. 24	
	REPLACEMENTS PARTS FOR REF. W AND W1	
31	Terminal Block, Bakelite	3561-197A
32	Cover, Bakelite	3561-198
33	No. 10-32 x 7/8″ Lg. fl. hd. mach. screw, brass	
34	No. 10-32 Hex. Nut, brass	
35	No. 10 Plain Washer, brass	
36	No. 10-32 x ½″ Lg. rd. hd. mach. screw, brass	
37	No. 6 x ¾″ Lg. fl. hd. wood screw, brass	
38	No. 10 Internal Everlock Washer, steel	
41	Box, cast aluminum	3561-75J
42	Cover, cast aluminum	3561-76
43	Gasket	3561-77A
44	Terminal Block	1005-102
45	No. 8-32 x ¾″ Lg. rd. hd. mach. screw & lock washer, brass	
46	No. 8-32 x 3/8″ Lg. rd. hd. mach. screw, brass	
47	3/8″ Cable Grip, for one 3-Conductor Cable	DB-938
48	Compression Connector	1580-7

Roadway Arms, Extendable Type

19′ MINIMUM 24′ MAXIMUM
ADJUSTABLE IN ONE-FOOT INCREMENTS

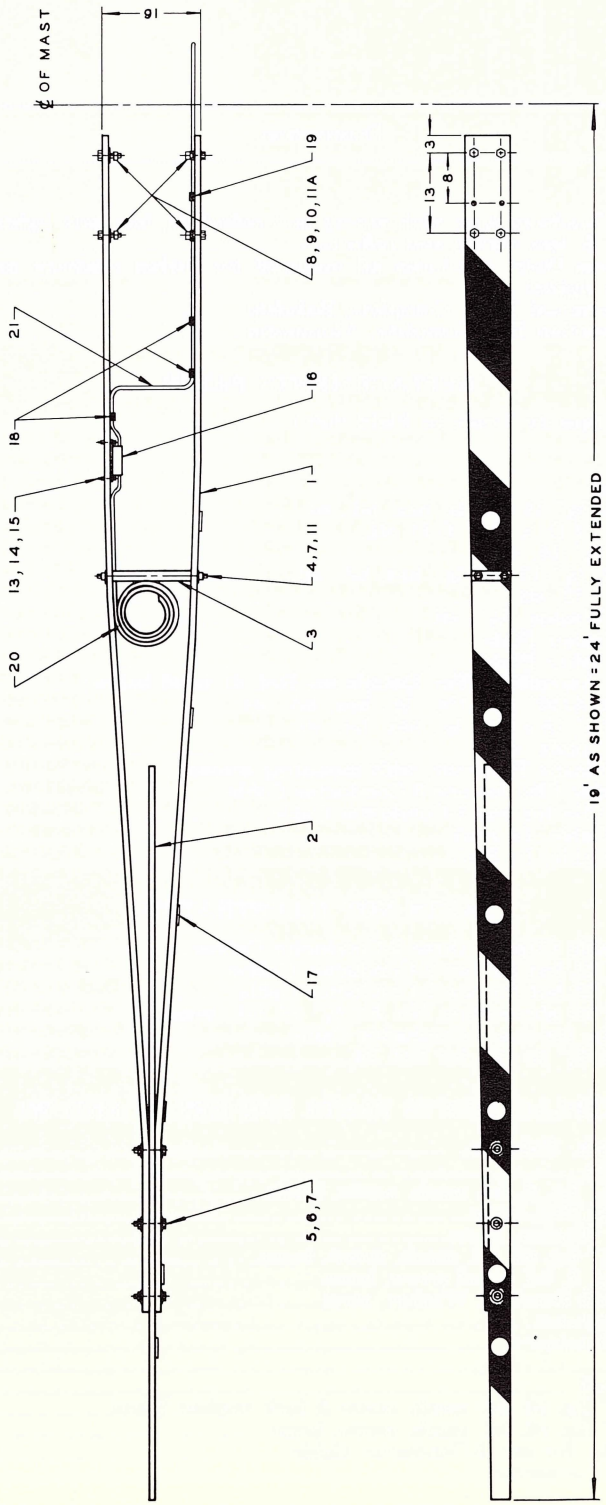

Ref. S3

Roadway Arms, Extendable Type

19′ MINIMUM 24′ MAXIMUM
ADJUSTABLE IN ONE-FOOT INCREMENTS

Ref. No.	Description	Piece No.
S3	Assembly of Roadway Arm with wiring and reflectors, less gate lights	3565-332
S4	Same as Ref. S3, less wiring and reflectors	3565-362
S5	Wiring Harness Only. (Includes all material for wiring roadway arm for three gate lights)	3565-342
	REPLACEMENT PARTS	
1	Base Board (Specify Track or Field Side)	3565-54-16
2	Tongue	3565-52B
3	Spacer Block	3565-55
4	Through Stud	3562-66EH
5	Machine Bolt, 3/8″-16 x 3″ lg. hex. hd., stl.	
6	Washer, 7/16″ I.D. x 1½″ O.D., stl.	
7	Square Nut, 3/8″-16, stl.	
8	Machine Bolt, ½″-13 x 2″ lg., hex. hd., stl.	
9	Hex. Nut, ½″-13, stl.	
10	Spring Lock Washer, ½″, stl.	
11	Aluminum Washer Plate	3565-56
11A	Aluminum Washer Plate	3562-71
13	Machine Bolt, 5/16″-18 x 1¾″ lg., hex. hd., stl.	
14	Hex. Nut, 5/16″-18, stl.	
15	Washer, 5/16″, plain, stl.	
16	Junction Box Assembly. (For Details see Pages 3-14 and 3-15)	3561-71D
17	3″ Diameter Plastic Reflector, with mounting screws	38B
18	Aluminum Cable Clip for one 3-Conductor Cable	
19	Nylon Cable Clip for one 3-Conductor Cable	1953-7A
20	2-Conductor Cable, In Bulk	
21	3-Conductor Cable, In Bulk	
	PARTS NOT ILLUSTRATED	
22	Aluminum Cable Clip for three 2-Conductor Cables	
22A	Same as Ref. 22, but for two 2-Conductor Cables	
22B	Same as Ref. 22, but for one 2-Conductor Cable	
23	Wood Screws for above clips, No. 8 x ¾″, rd. hd., brass	
24	Terminal Block and Mounting screws (For Details see Pages 3-14 and 3-15)	3561-196
25	½″ Cable Grip, for one 3-Conductor Cable	DB-990
26	Pipe Reducer, ¾″ to ½″, for Ref. 25	

Roadway Arms, Extendable Type

25′ MINIMUM 30′ MAXIMUM
ADJUSTABLE IN ONE-FOOT INCREMENTS

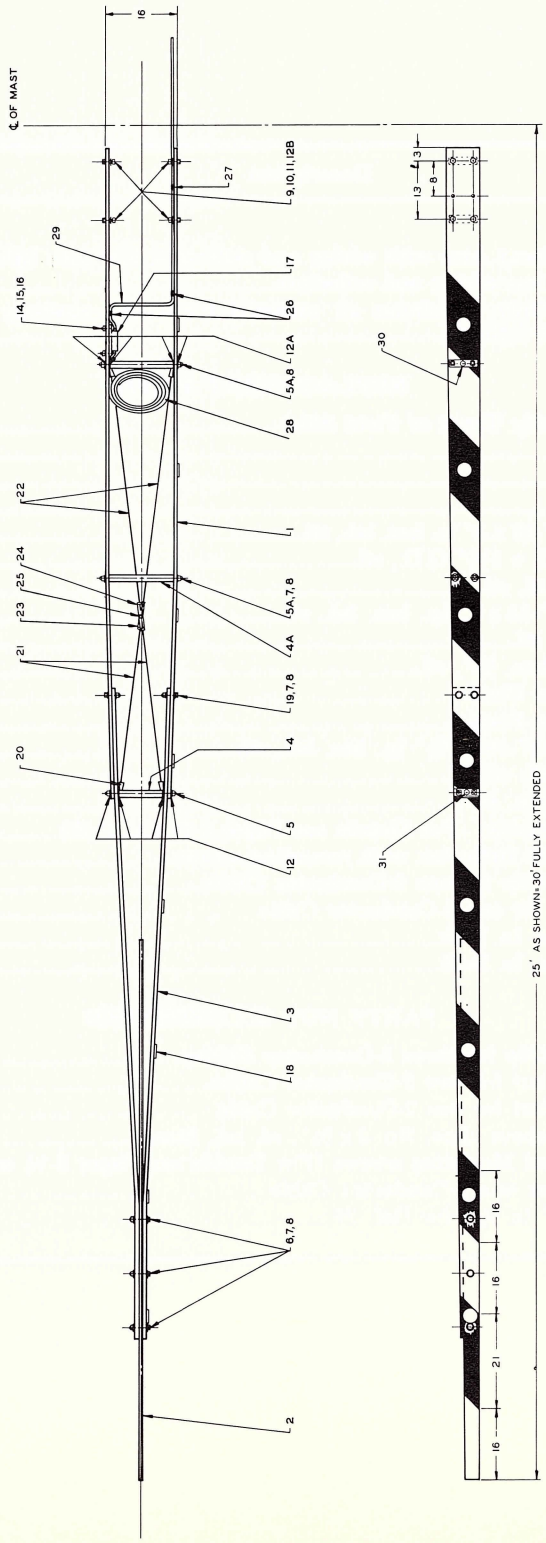

Ref. S6

Roadway Arms, Extendable Type

25′ MINIMUM 30′ MAXIMUM
ADJUSTABLE IN ONE-FOOT INCREMENTS

Ref. No.	Description	Piece No.
S6	Assembly of Roadway Arm with wiring and reflectors, less gate lights	3565-333
S7	Same as Ref. S6, less wiring and lights	3565-363
S8	Wiring Harness Only (Includes all material for wiring roadway arm for three gate lights)	3565-343
	REPLACEMENT PARTS	
1	Base Board (Specify Track or Field side)	3562-53-12
2	Tongue	3562-54-12E
3	Side Board (Specify Track or Field side)	3562-52B
4	Spacer Block	3562-75
4A	Spacer Block	3562-74
5	Through Stud	3562-66B
5A	Through Stud	3562-66
6	Machine Bolt, 3/8″-16 x 3″ lg. hex. hd., stl.	
7	Washer, 7/16″ I.D. x 1½″ O.D., stl.	
8	Square Nut, 3/8″-16, stl.	
9	Machine Bolt, ½″-13 x 2″ lg. hex. hd., stl.	
10	Hex. Nut, ½″-13, stl.	
11	Spring Lock Washer, ½″, stl.	
12	Aluminum Washer Plate	3562-72A
12A	Aluminum Washer Plate	3562-71A
12B	Aluminum Washer Plate	3562-71
14	Machine Bolt, 5/16″-18 x 1¾″ lg., hex. hd., stl.	
15	Hex. Nut, 5/16″-18, stl.	
16	Washer, 5/16″, plain, stl.	
17	Junction Box Assembly (For Details see Pages 3-14 and 3-15)	3561-71D
18	3″ Diameter Plastic Reflector, with Mounting Screws	38B
19	Machine Bolt, 3/8″-16 x 2¼″ lg., hex. hd., stl.	
20	Tie-Rod Clip Assembly	3562-70A
21	Tie-Rod and Nut Assembly 41½″ lg., right hand thread	3562-63E
22	Tie-Rod and Nut Assembly 48″ lg., left hand thread	3562-63F
23	Turnbuckle	3562-67
24	Turnbuckle	3562-68
25	Cap Screw, ¼″-20 x 1¼″ lg., hex. hd., stl.	
26	Aluminum Cable Clip for one 3-Conductor Cable	
27	Nylon Cable Clip for one 3-Conductor Cable	1953-7A
28	2-Conductor Cable, In Bulk	
29	3-Conductor Cable, In Bulk	
30	Machine Bolt, 5/16″-18 x 1¾″ lg., hex. hd., with sq. nut	
31	Machine Bolt, 5/16″-18 x 2½″ lg., hex. hd., with sq. nut	
	PARTS NOT ILLUSTRATED	
32	Wood Screws, No. 8 x ¾″ rd. hd., Brass, for Cable Clips	
33	Terminal Block and Mounting Screws (For Details see Pages 3-14 and 3-15)	3561-196
34	½″ Cable Grip, for one 3-Conductor Cable	DB-990
35	Pipe Reducer, ¾″ to ½″, for Ref. 34	

WESTERN RAILROAD SUPPLY COMPANY

Roadway Arms

31' TO 38' LONG, AS SPECIFIED

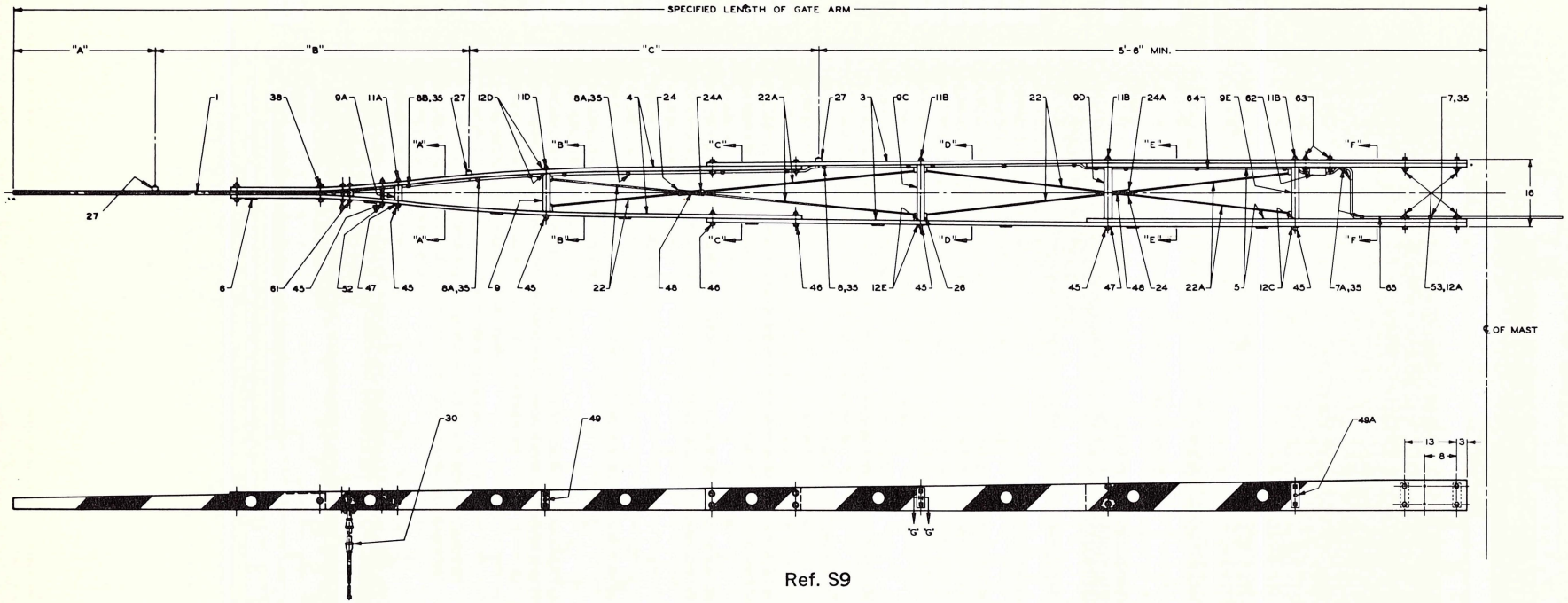

Ref. S9

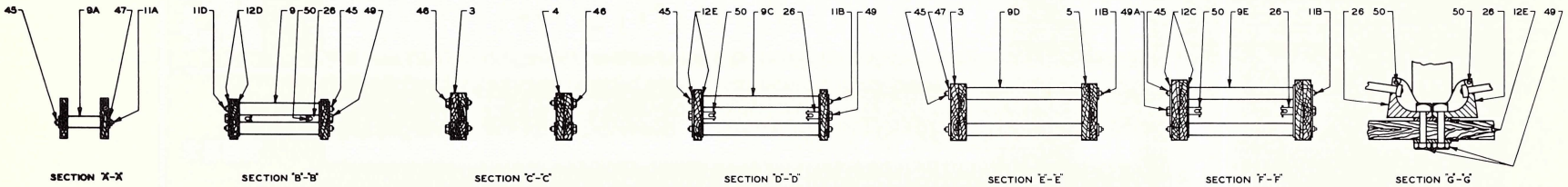

Roadway Arms

31′ TO 38′ LONG, AS SPECIFIED

Each arm in this range is constructed to the length specified.

Ref. No.	Description	Piece No.
S9	Assembly of Roadway Arm, complete with wiring and reflectors less gate lights. (Specify Length of Arm and Dimensions "A," "B" and "C")	3565-34ML
S10	Same as Ref. A, less wiring and reflectors (Specify Length of Arm)	3565-60
S11	Wiring Harness Only (Includes all material for wiring roadway arm for three gate lights.) (Specify Length of Arm and Dimensions "A," "B" and "C")	3565-215MB
	REPLACEMENT PARTS	
1	Tongue	See Table
3	Base Board (Specify Track or Field side)	See Table
4	Side Board (Specify Track or Field side)	See Table
5	Re-enforcing Board	3562-53-8
6	3″ Dia. Plastic Reflector	38B
7	Nylon Cable Clip, for one 3-Conductor Cable	1953-7A
7A	Aluminum Cable Clip, for one 3-Conductor Cable	
8	Aluminum Cable Clip, for three 2-Conductor Cables	
8A	Same as Ref. 8, but for two 2-Conductor Cables	
8B	Same as Ref. 8, but for one 2-Conductor Cable	
9	Spacer Block, 10⅛″ lg.	3562-75
9A	Spacer Block, 4″ lg.	3562-76
9C	Spacer Block, 14⅛″ lg.	3562-87
9D	Spacer Block, 13″ lg.	3562-74XR
9E	Spacer Block, 12¾″ lg.	3562-74R
11A	Through Stud, 6½″ lg.	3562-66D
11B	Through Stud, 16⅞″ lg.	3562-66
11D	Through Stud, 12¾″ lg.	3562-66E
12A	Washer Plate	3562-71
12C	Washer Plate	3562-71A
12D	Washer Plate	3562-82
12E	Washer Plate	3562-72B
22	Tie-Rod and Nut Assembly, 41½″ lg., right hand thread	3562-63E
22A	Tie-Rod and Nut Assembly, 48″ lg., left hand thread	3562-63F
24	Turnbuckle	3562-67
24A	Turnbuckle	3562-68
26	Tie-Rod Clip	3562-70A
27	Assembly of Terminal Block (For Details see Pages 3-14 and 3-15)	3561-196
30	Buffer Leg (For Details see Page 3-29)	3562-316A
35	No. 8 x ¾″ rd. hd. wood screw, brass	
38	Machine Bolt, ⅜″-16 x 3″ lg., hex. hd., sq. nut and 2 plain washers	
45	Sq. Nut, ⅜″-16, stl.	
46	Machine Bolt, ⅜″-16 x 2¼″ lg., hex. hd., stl., sq. nut and 2 plain washers	
47	Washer, 7/16″ I.D. x 1½″ O.D., plain, stl.	
48	Cap Screw, ¼″-20 x 1¼″ lg., hex. hd., stl.	
49	Machine Bolt, hex. hd., 5/16″-18 x 1¾″ lg., and sq. nut	
49A	Machine Bolt, hex. hd., 5/16″-18 x 2½″ lg., and sq. nut	
50	Cotter Pin, ⅛″ x 1½″ lg., stl.	
52	Through Stud, 5⅛″ lg.	3562-66AK
53	Machine Bolt, ½″-13 x 2¾″ lg., hex. hd., stl., hex. nut and lock washer	
61	Rivet, rd. hd., stl., ⅜″ x 3½″, complete with cotter pin	3362-133A
62	Junction Box Assembly (For Details see Pages 3-14 and 3-15)	3561-71D
63	Machine Bolt, 5/16″-18 x 1¾″ lg., hex. hd., hex. nut and 2 plain washers	
64	2-Conductor Cable, In Bulk	
65	3-Conductor Cable, In Bulk	
	PARTS NOT ILLUSTRATED	
70	½″ Cable Grip, for 3-Conductor Cable	DB990
71	Pipe Reducer, ¾″ to ½″, for Ref. 70	

Table

Specified Length of Gate Arm	Reference 1 Tongue Piece No.	Reference 3 Base Board Piece No.	Reference 4 Side Board Piece No.
31	3562-52A	3562-16	3562-54-12A
32	3562-52B	3562-16	3562-54-12A
33	3562-52C	3562-16	3562-54-12A
34	3562-52D	3562-16	3562-54-12A
35	3562-52A	3562-16A	3562-54-16
36	3562-52B	3562-16A	3562-54-16
37	3562-52C	3562-16A	3562-54-16
38	3562-52D	3562-16A	3562-54-16

Roadway Arms

39′ TO 44′ LONG

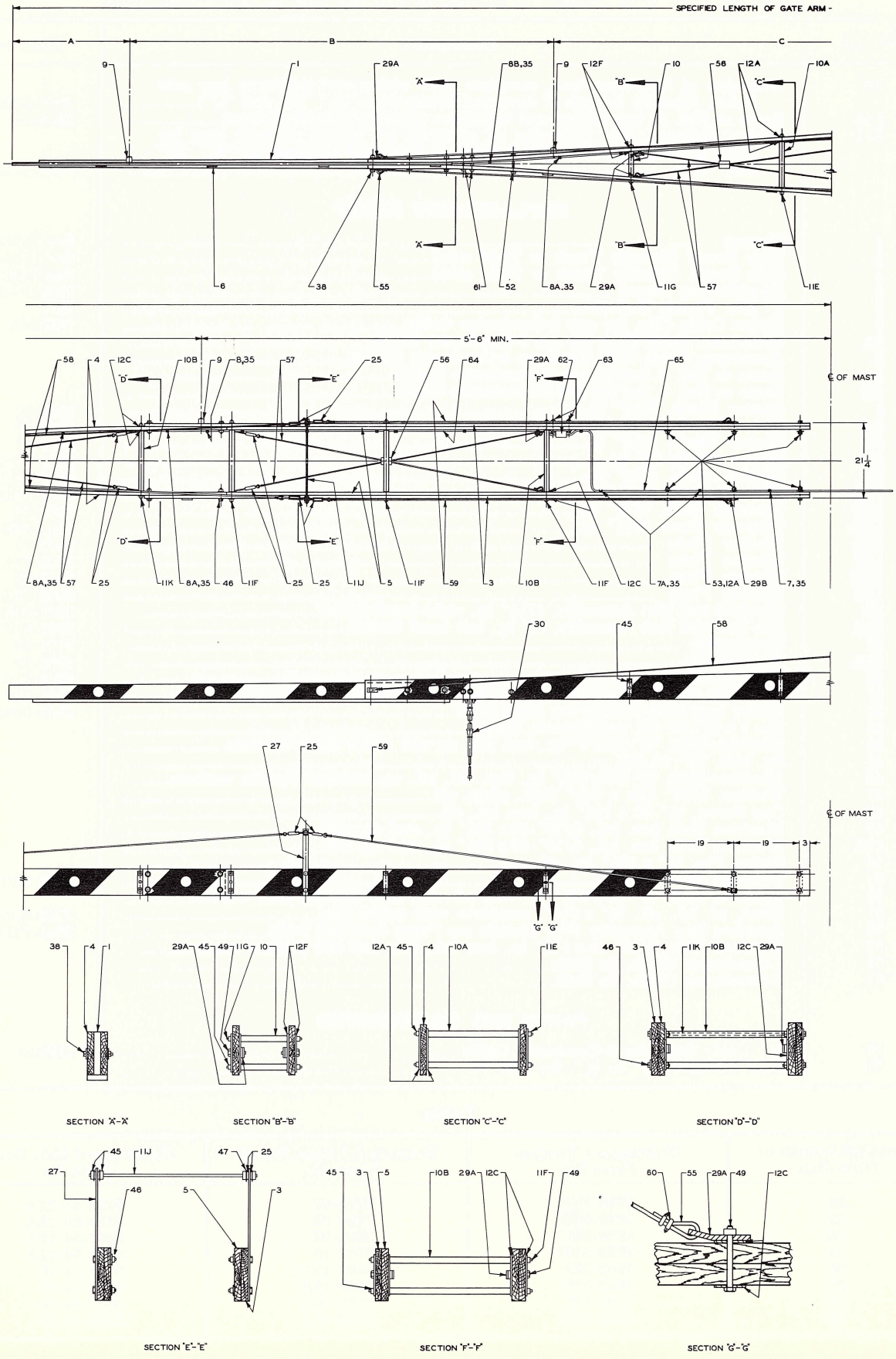

Roadway Arms

39′ TO 44′ LONG

Ref. No.	Description	Piece No.
S12	Assembly of Roadway Arm complete with wiring and reflectors, less gate lights. (Specify Length of Arm and Dimensions "A," "B" and "C")	3565-34ML
S13	Same as Ref. S12, less wiring and reflectors. (Specify Length of Arm)	3565-60
S14	Wiring Harness Only. (Includes all material for wiring roadway arm for three gate lights.) (Specify Length of Arm and Dimensions "A," "B" and "C")	3565-215MB
	REPLACEMENT PARTS	
1	Tongue, for 39′ arm	3562-52J
1A	Tongue, for 40′ arm	3562-52K
1B	Tongue, for 41′ arm	3562-52L
1C	Tongue, for 42′ arm	3562-52M
1D	Tongue, for 43′ arm	3562-52N
1E	Tongue, for 44′ arm	3562-52P
3	Base Board, (Specify Track or Field side)	3562-54-16F
4	Side Board, (Specify Track or Field side)	3562-54-16A
5	Reinforcing Board	3562-54-14E
6	3″ Diameter Plastic Reflector	38B
7	Nylon Cable Clip, for one 3-Conductor Cable	1953-7A
7A	Aluminum Cable Clip, for one 3-Conductor Cable	
8	Aluminum Cable Clip, for three 2-Conductor Cables	
8A	Same as Ref. 8, but for two 2-Conductor Cables	
8B	Same as Ref. 8, but for one 2-Conductor Cable	
9	Assembly of Terminal Block (For Details see Pages 3-14 and 3-15)	3561-196
10	Spacer Tubing, 7″ long	3562-99B
10A	Spacer Tubing, 13¼″ long	3562-99A
10B	Spacer Tubing, 17¾″ long	3562-99
11E	Through Stud, 16″ long	3562-66X
11F	Through Stud, 21¾″ long	3562-66Y
11G	Through Stud, 10⅛″ long	3562-66F
11J	Through Stud, 24″ long	3562-272B
11K	Through Stud, 20¼″ long	3562-66N
12A	Washer Plate	3562-71
12C	Washer Plate	3562-71A
12F	Washer Plate	3562-273
25	Turnbuckle	3562-184
27	Upright Support	3562-271
29A	Guy Wire Clip	3562-283
29B	Guy Wire Clip	3562-282A
30	Buffer Leg (For Details see Page 3-29)	3562-316A
35	No. 8 x ¾″ rd. hd. wood screws, brass	
38	Machine Bolt, ⅜″-16 x 3″ lg., hex. hd., stl., sq. nut and two plain washers	
45	Sq. Nut, ⅜″-16, stl	
46	Machine Bolt, ⅜″-16 x 2¼″ lg., hex. hd., stl., sq. nut and 2 plain washers	
47	Washer, 7/16″ I.D. x 1⅛″ O.D., Plain, stl	
49	Machine Bolt, hex. hd., ½″-13 x 1¾″ long and sq. nut	
52	Through Stud, 5⅛″ long	3562-66AK
53	Machine Bolt, hex. hd., ½″-13 x 2¾″ lg. hex. nut and lock washer	
55	Thimble	90591
56	Cable Separator	3562-282
57	Guy Wire Subassembly, 7′-6″ lg., (Includes Ref. 25, 55 and 60)	3562-284B
58	Guy Wire Subassembly, 18′-0″ lg., (Includes Ref. 25, 55 and 60)	3562-284A
59	Guy Wire Subassembly, 10′-0″ lg., (Includes Ref. 25, 55 and 60)	3562-284
60	Crosby Clip	90592
61	Rivet, rd. hd., stl., ⅜″ x 3⅛″, complete with cotter pin	3562-133A
62	Junction Box Assembly. (For Details see Pages 3-14 and 3-15)	3561-71D
63	Machine Bolt, 5/16″-18 x 1¾″ lg., hex. hd., hex. nut and 2 plain washers	
64	2-Conductor Cable, In Bulk	
65	3-Conductor Cable, In Bulk	
	PARTS NOT ILLUSTRATED	
70	½″ Cable Grip, for 3-Conductor Cable	DB990
71	Pipe Reducer, ¾″ to ½″	

Sidewalk Arms 6' to 18' Long
Type 3565-34SW Type 3565-60SW
For Model 10 Signals

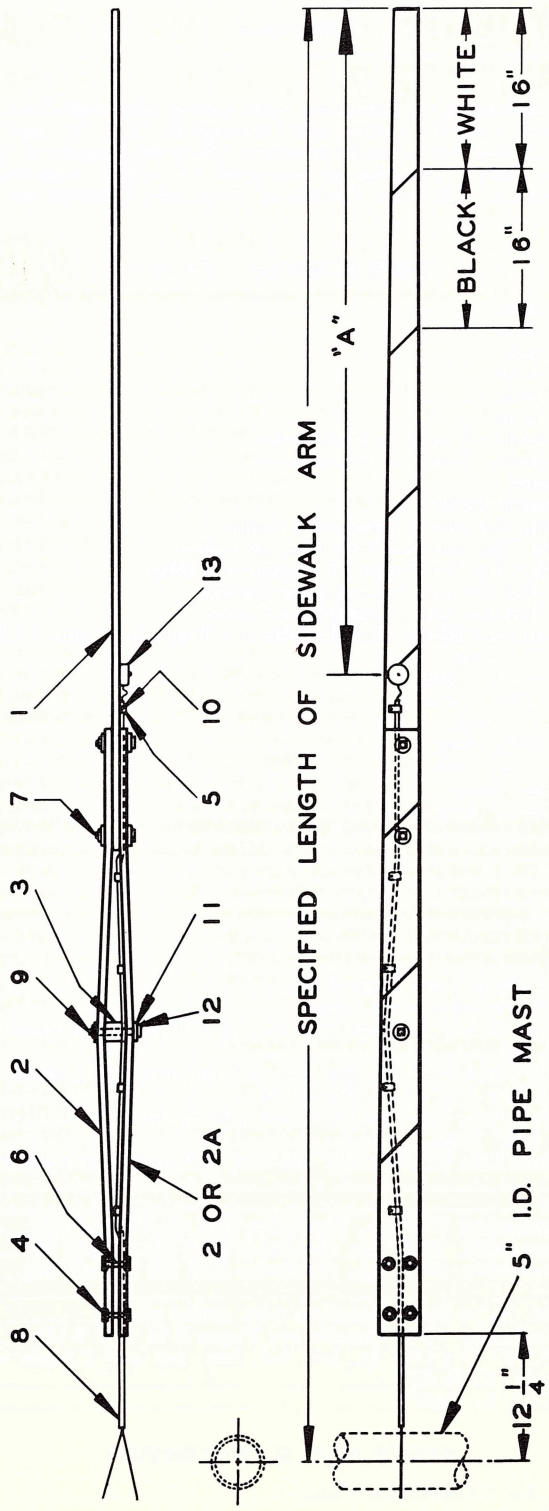

Ref. U

Sidewalk Arms 6' to 18' Long
Type 3565-34SW Type 3565-60SW
For Model 10 Signals

Ref. No.	Description	Piece No.
U	Assembly of Sidewalk Arm Complete with Wiring (Less Light) (Specify Length of Sidewalk Arm and Dimension "A")	3565-34SW
U1	Assembly of Sidewalk Arm Complete (Less Wiring and Light) (Specify Length of Sidewalk Arm)	3565-60SW
	REPLACEMENT PARTS	
1	Tongue	See Table
2	Base Board	See Table
2A	Base Board (For 3565-34SW only)	See Table
3	Spacer Block	3565-150
4	5/16" Plain Washer	
5	Clip	3562-95
6	Cap Screw, 5/16"-24 S.A.E. x 1½" Lg. hex. hd. stl.	
7	Mach. Bolt, ⅜"-16 x 3¼" Lg. sq. hd. stl., hex. Nut and two Plain Washers	
8	No. 18-2 Conductor Neoprene Covered Type "S" Cord. (Specify Length)	
9	Through Stud	3562-66DD
10	Wood Screw No. 10 x ¾" Lg. rd. hd. brass	
11	Washer ⅜" Plain, Stl.	
12	Hex. Nut ⅜"-16 Stl.	
13	Assembly of Terminal Block (For Details see Pages 3-14 and 3-15)	3561-196

Table

Specified Length of Gate Arm	Ref. No. 1	Ref. No. 2	Ref. No. 2A	Suggested Values For Dimension "A"
6'-0"	3565-142-1	3565-141	3565-141A	2'-2"
6'-6"	3565-142-1A	3565-141	3565-141A	2'-5"
7'-0"	3565-142-2	3565-141	3565-141A	2'-8"
7'-6"	3565-142-2A	3565-141	3565-141A	2'-11"
8'-0"	3565-142-3	3565-141	3565-141A	3'-2"
8'-6"	3565-142-3A	3565-141	3565-141A	3'-5"
9'-0"	3565-142-4	3565-141	3565-141A	3'-8"
9'-6"	3565-142-4A	3565-141	3565-141A	3'-11"
10'-0"	3565-142-5	3565-141	3565-141A	4'-2"
10'-6"	3565-142-5A	3565-141	3565-141A	4'-5"
11'-0"	3565-142-6	3565-141	3565-141A	4'-8"
11'-6"	3565-142-6A	3565-141	3565-141A	4'-11"
12'-0"	3565-142-7	3565-141	3565-141A	5'-2"
12'-6"	3565-142-4A	3565-155	3565-155A	5'-5"
13'-0"	3565-142-5	3565-155	3565-155A	5'-8"
13'-6"	3565-142-5A	3565-155	3565-155A	5'-11"
14'-0"	3565-142-6	3565-155	3565-155A	6'-2"
14'-6"	3565-142-6A	3565-155	3565-155A	6'-5"
15'-0"	3565-142-7	3565-155	3565-155A	6'-8"
15'-6"	3565-142-4A	3565-156	3565-156A	6'-11"
16'-0"	3565-142-5	3565-156	3565-156A	7'-2"
16'-6"	3565-142-5A	3565-156	3565-156A	7'-5"
17'-0"	3565-142-6	3565-156	3565-156A	7'-8"
17'-6"	3565-142-6A	3565-156	3565-156A	7'-11"
18'-0"	3565-142-7	3565-156	3565-156A	8'-2"

Sidewalk Arms 6' to 18' Long

Type 3565-34SWX Type 3565-60SWX

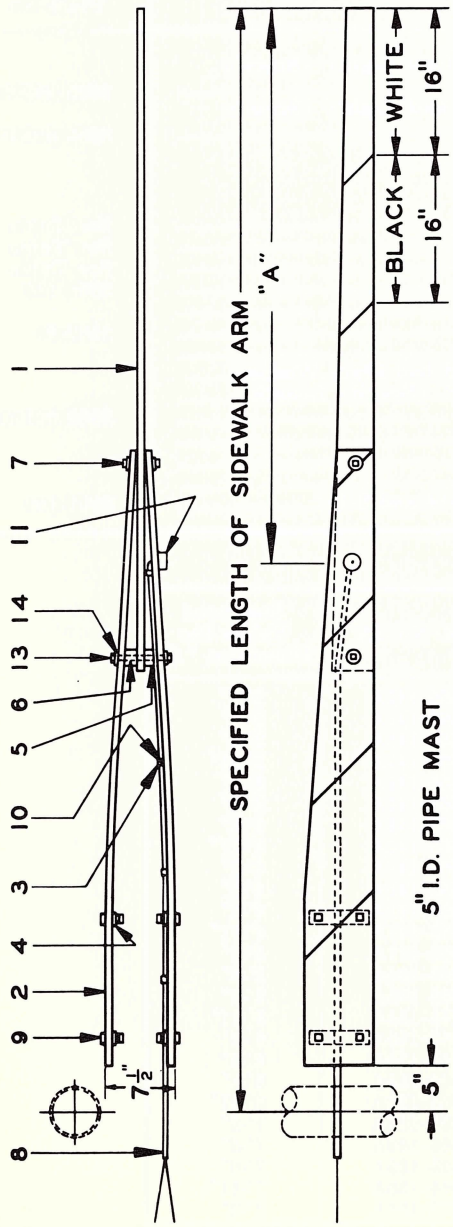

Arm lengths 6' to 10'-6"
Ref. U2

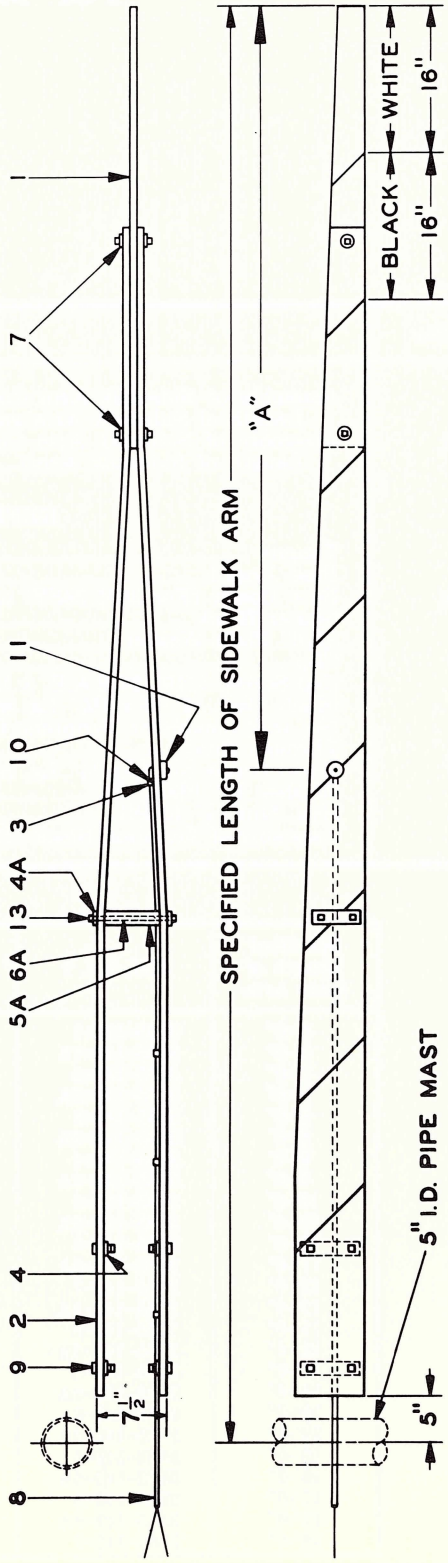

Arm lengths 11' to 18'
Ref. U3

Sidewalk Arms 6' to 18' Long
Type 3565-34SWX Type 3565-60SWX

Ref. No.	Description	Piece No.
U2	Assembly of Sidewalk Arm Complete with Wiring (Less Light) (Specify Length of Sidewalk Arm and Dimension "A")	3565-34SWX
U3	Assembly of Sidewalk Arm Complete (Less Wiring and Light) (Specify Length of Sidewalk Arm)	3565-60SWX
	REPLACEMENT PARTS	
1	Tongue	See Table
2	Base Board	See Table
3	Clip	3562-95
4	Washer Plate	3562-71
4A	Washer Plate	3562-72
5	Spacer Block	3562-98
5A	Spacer Block	3562-59
6	Through Stud	3562-66D
6A	Through Stud	3562-66H
7	Mach. Bolt, 3/8"16 x 3" Lg. sq. hd. stl., hex. Nut and two Plain Washers	
8	No. 18-2 Conductor Neoprene Covered Type "S" Cord (Specify Length)	
9	Mach. Bolt, 1/2"-13 x 2" Lg. hex. hd. stl., hex. Nut and Lock Washer	
10	Wood Screw No. 10 x 3/4" Lg. brass	
11	Assembly of Terminal Block Complete (For Details see Pages 3-14 and 3-15)	3561-196

Table

Specified Length of Gate Arm	Ref. No. 1	Ref. No. 2	Suggested Values For Dimension "A"
6'-0"	3562-57-2	3562-56-6	2'-2"
6'-6"	3562-57-2A	3562-56-6	2'-5"
7'-0"	3562-57-3	3562-56-6	2'-8"
7'-6"	3562-57-3A	3562-56-6	2'-11"
8'-0"	3562-57-4	3562-56-6	3'-2"
8'-6"	3562-57-4A	3562-56-6	3'-5"
9'-0"	3562-57-5	3562-56-6	3'-8"
9'-6"	3562-57-5A	3562-56-6	3'-11"
10'-0"	3562-57-6	3562-56-6	4'-2"
10'-6"	3562-57-6A	3562-56-6	4'-5"
11'-0"	3562-57-2	3562-58	4'-8"
11'-6"	3562-57-2A	3562-58	4'-11"
12'-0"	3562-57-3	3562-58	5'-2"
12'-6"	3562-57-3A	3562-58	5'-5"
13'-0"	3562-57-4	3562-58	5'-8"
13'-6"	3562-57-4A	3562-58	5'-11"
14'-0"	3562-57-5	3562-58	6'-2"
14'-6"	3562-57-5A	3562-58	6'-5"
15'-0"	3562-57-6	3562-58	6'-8"
15'-6"	3562-57-6A	3562-58	6'-11"
16'-0"	3562-57-7	3562-58	7'-2"
16'-6"	3562-57-7A	3562-58	7'-5"
17'-0"	3562-57-8	3562-58	7'-8"
17'-6"	3562-57-8A	3562-58	7'-11"
18'-0"	3562-57-9	3562-58	8'-2"

Hinged-Tongue Roadway Gate Arms

ENGINEERED AND CUSTOM BUILT TO MEET SPECIFIC REQUIREMENTS

Where overhead wires or structures would obstruct the gate arm in the raised, or clear, position it is often necessary to provide a special gate arm with a hinged tongue. Illustrated is a typical arm of this type.

Arms of 14′ to 44′, extended length, can usually be made to meet requirements if the clearance height does not necessitate a hinged tongue exceeding one-third of the total arm length.

Given the specific requirements we will submit a drawing for consideration depicting a recommended design. To enable us to perfect a suitable design the dimensions "C" and "D" must, of course, be known. If the obstruction is not directly above the mast, but is out over the roadway, then the distance from the mast as well as the height of the obstruction above the top of the signal foundation must also be known.

No general replacement parts list for hinged-tongue gate arms can be compiled for cataloging. However, drawings are furnished with each arm supplied, from which replacement parts can be ordered, if required.

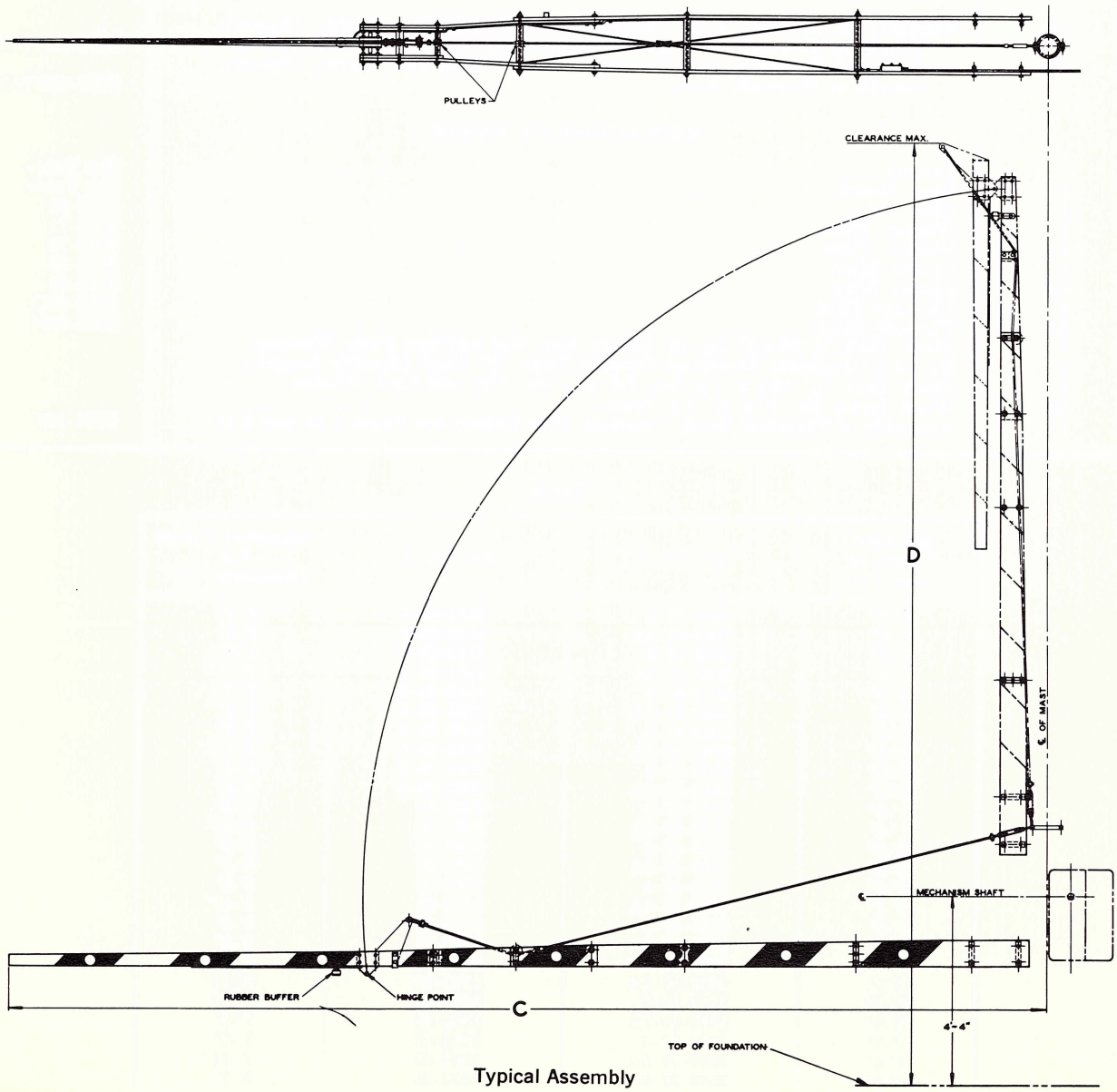

Typical Assembly

Buffer Leg
For Use With Roadway Arms 31' to 44' Long

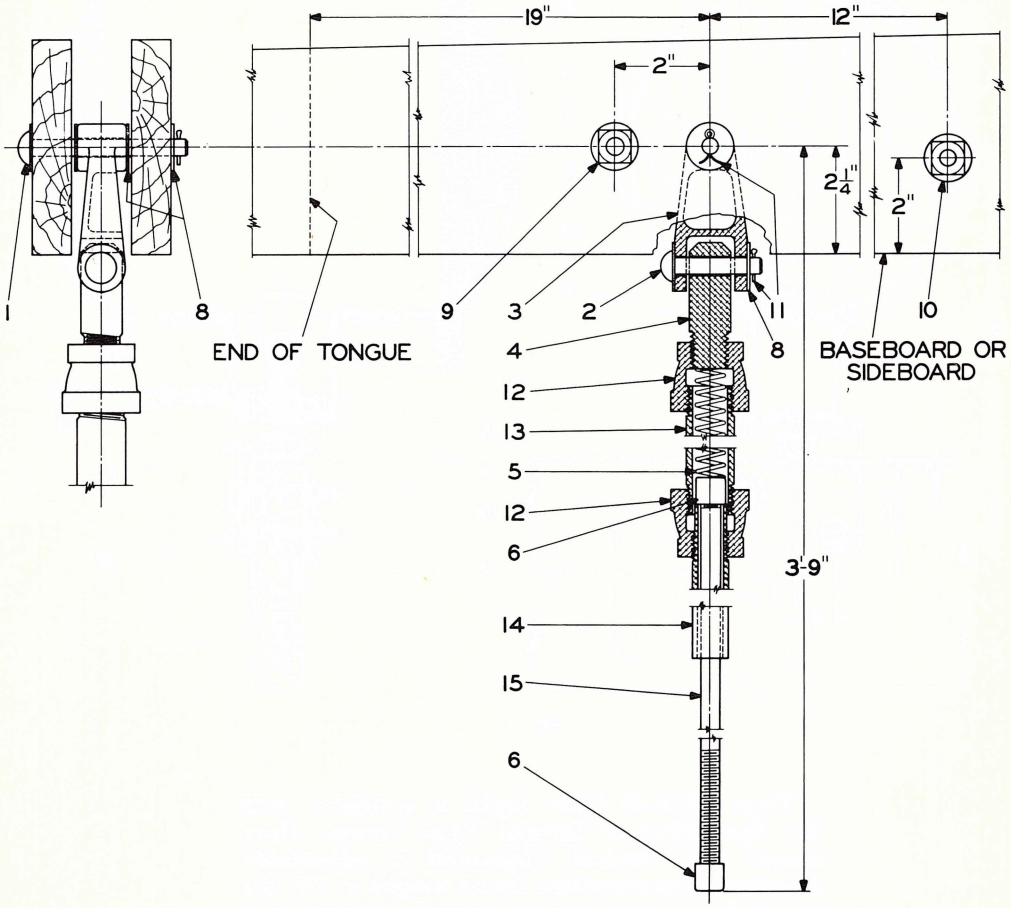

Ref. No.	Description	Piece No.
X	Buffer Leg Assembly Complete	3562-316A
X1	Same as Ref. X, Less Ref. No. 9 & 10	3562-316
	REPLACEMENT PARTS	
1	Rivet, 3/8" x 3 1/4" Lg. stl.	3562-133A
2	Rivet, 3/8" x 1 7/8" Lg. stl.	3562-133
3	Yoke	3562-117B
4	Plug	3562-317
5	Compression Spring	3562-318
6	Pipe Cap., stl.	3562-319
8	Plain Washer, 3/8" I.D. x 1" O.D., stl.	
9	Mach. Bolt, 3/8"-16 x 3 1/2 "Lg., sq. hd., sq. nut and plain Washer, stl.	
10	Through Stud, 5 1/8" Lg., Aluminum	3562-66AK
11	Cotter Pin, 1/16" x 3/4" Lg., stl.	
12	Reducer, 3/4" x 1/2", Aluminum	
13	Pipe Nipple, 3/4" x 12" Lg. T.B.E. Aluminum	
14	Pipe, 1/2" x 4 1/2" Lg. T.O.E. Aluminum	3562-326
15	Pipe, 1/4" x 2'-5" Lg. Aluminum	3562-320

Gate Light—Type 1573-50
Two-Way Indication—5⅜″ Diameter Lenses

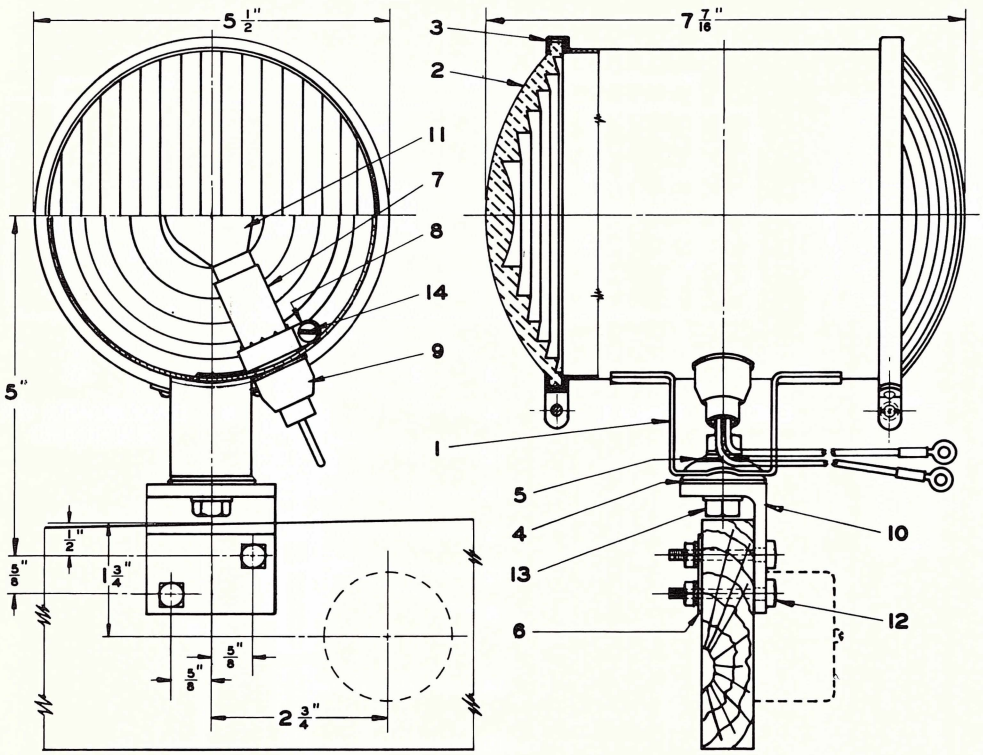

Ref. A

Type 1573-50 Gate Light is available with 30° Spreadlite or Optical Type Lenses. Horizontal and Vertical Alignment is adjustable. Aluminum construction limits weight at 2¼ lbs. S.C.B.B. lamp receptacle provided; lamp bulb not furnished unless specified.

Ref. No.	Description	Piece No.
T	Type 1573-50 Gate Light Complete, with 30° Spreadlite Lens (Red), Without Electric Lamp unless specified	1573-50
	REPLACEMENT PARTS	
1	Gate Light Body Assembly	1573-6
2	30° Spreadlite Lens, 5⅜″ Diameter, Red	5330
3	Lens Ring	0500-106S-B
4	Adjusting Washer	1563-15
5	Washer, Steel	1563-16
6	Washer Plate	1563-5
7	Lamp Receptacle Assembly	6001-5
8	Clamp	1573-3
9	Insulator Bushing	1563-8
10	Mounting Bracket	1563-2A
11	Lamp, Incandescent, S.C.B.B., S-11 Bulb (Specify Voltage and Wattage)	
12	Mach. Bolt, ¼″-20 x 1½″ Lg. sq. hd. steel and sq. nut	
13	Cap Screw, 5/16″-18 x 1¼″ Lg. hex. hd. steel	
14	Mach. Screw, No. 8-32 x ⅝″ Lg. rd. hd. brass and hex. nut	

Gate Light—Type 1585
Fresnel Lens

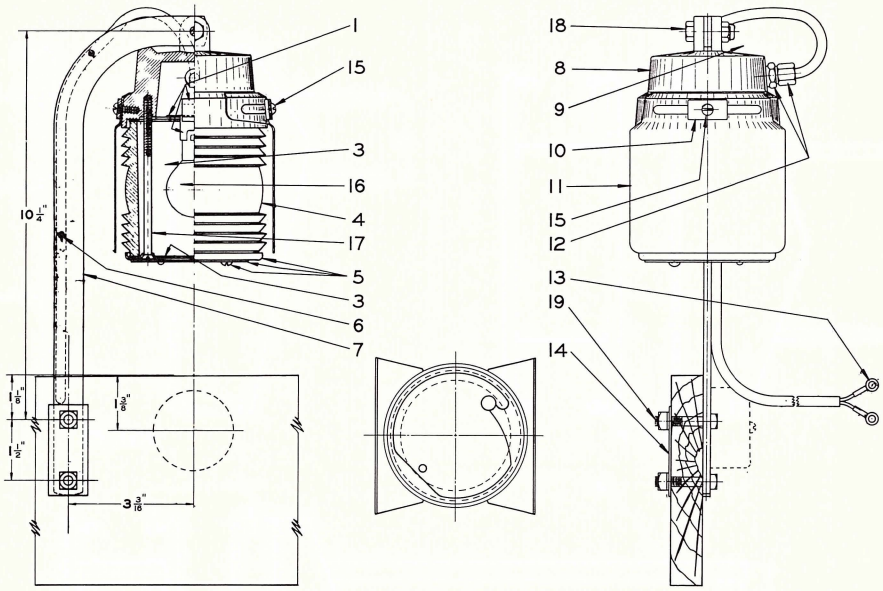

Type 1585 Gate Light is equipped with a 3⅝″ diameter, red, 360° Fresnel Lens, shielded to provide indication to cross traffic only. A constant vertical axis is provided by the suspension mounting bracket. Wt. 2 lbs.; S.C.B.B. lamp receptacle; lamp bulb not furnished unless specified.

Ref. No.	Description	Piece No.
T2	Type 1585 Gate Light Complete with Mounting Bracket and Shields	1585
T3	Same as Ref. T2, Less Shields	1585-40
T4	Subassembly of Gate Light, with Shields, Less Mounting Bracket	1585-18AX
T5	Same as Ref. T4, Less Mounting Bracket and Shields	1585-40AX
T6	Subassembly of Mounting Bracket (Includes Items 6, 7, 14 and 19)	1585-15A
	REPLACEMENT PARTS	
1	Lamp Receptacle, Cord, Bracket Assembly	1585-12B
3	Gasket	1575-10
4	Fresnel Lens, 360°, Red, Plastic	1575-11P
5	Cover and Retaining Ring Subassembly	1585-11
6	Wire Retainer	1573-9
7	Mounting Bracket	1585-9
8	Housing	1585-3
9	¼″-20 Dualock Nut	90163
10	Shield Clamp	1585-7
11	Shield	1585-2
12	Compression Connector	1580-7
13	Terminal	31887
14	Washer Plate	1575-16
15	Mach. Screw, No. 10-24 x ½″ Lg. rd. hd. brass	
16	Lamp, Incandescent, S.C.B.B., Type S-11 Bulb (Not furnished unless Specified)	
17	Stove Bolt, 3/16″ (10-24) x 4″ Lg. fl. hd. stl.	
18	Pivot Screw	1585-14
19	Mach. Bolt, ¼″-20 x 1½″ Lg. sq. hd., sq. nut and Internal Lockwasher	

Gate Arm Support
For Model 10 Signals
Types 3565-105, 3565-105X, 3565-205

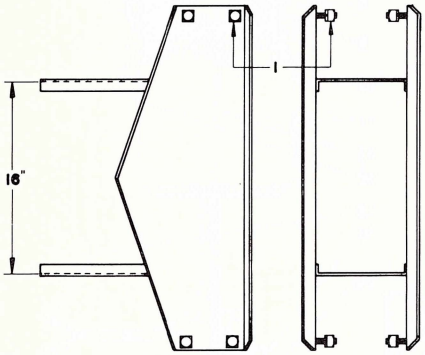

Ref. P

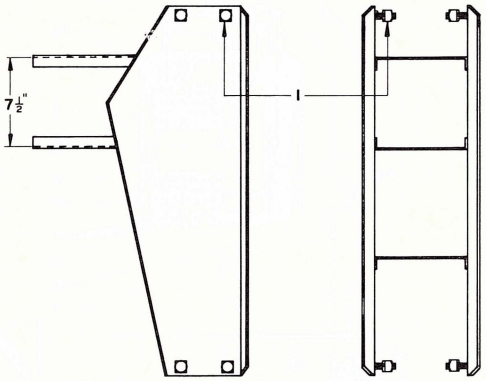

Ref. P2

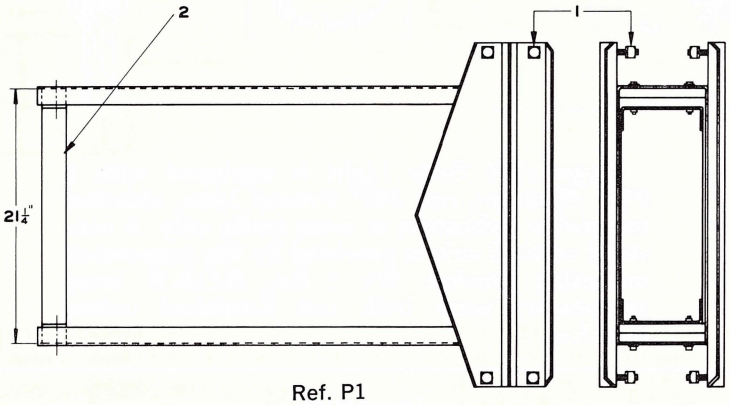

Ref. P1

Ref. No.	Description	Piece No.
P	Gate Arm Support for use with Roadway Arms 14′ to 38′ Long Inclusive. (Includes Item 1)	3565-105
P1	Same as Ref. P, but for use with Roadway Arms 39′ to 44′ Long Inclusive. (Includes Items 1, 2, and shipping blocks)	3565-105X
P2	Same as Ref. P, but for use with Sidewalk Arms 18′ Long or Less. (Includes Item 1)	3565-205
	REPLACEMENT PARTS	
1	Mach. Bolt, ½″-13 x 1¾″ Lg. hex. hd., sq. nut and Lockwasher	
2	Inner Brace	3565-113

Mechanism Support For Model 10 Signals Type 3565-380A

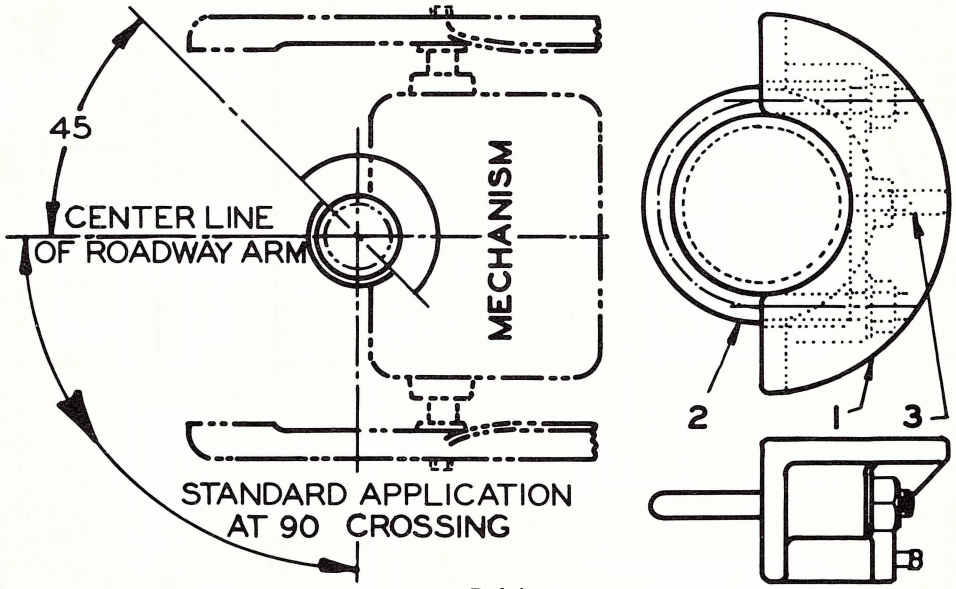

Ref. L

Because, on occasion, only one man is available to service a gate mechanism or damaged gate arm, we offer our No. 3565-380A Mechanism Support illustrated above. One such support complete is furnished with each mechanism.

The device may be secured permanently to the mast, or carried as part of a maintainer's servicing equipment.

Procedure is as follows—

Attach support to mast and against the under side of the mechanism.

Loosen mechanism clamp bolts.

Remove ⅜″ cap screws holding the conduit flange to the junction box base.

When traffic permits, open "Motor Up" and "Slot" circuits in Mechanism.

Swing mechanism and gate assembly away from tracks until arm is parallel to curb or highway edge.

After repair is completed, reverse procedure, being careful not to restore "Slot" and "Motor Up" wires until mechanism is restored to its normal position.

Ref. No.	Description	Piece No.
L	Mechanism Support Complete for 5″ I.D. Pipe Mounting	3565-380A
	REPLACEMENT PARTS	
1	Mechanism Support only	3565-380
2	"U" Bolt for 5″ I.D. Pipe Mounting	0700-276
3	Set Screw, ½″-13 x 1¾″ Lg. sq. hd. Cup Pt. Stl.	

Gate and Counterweight Arm
For Model 10 Signals

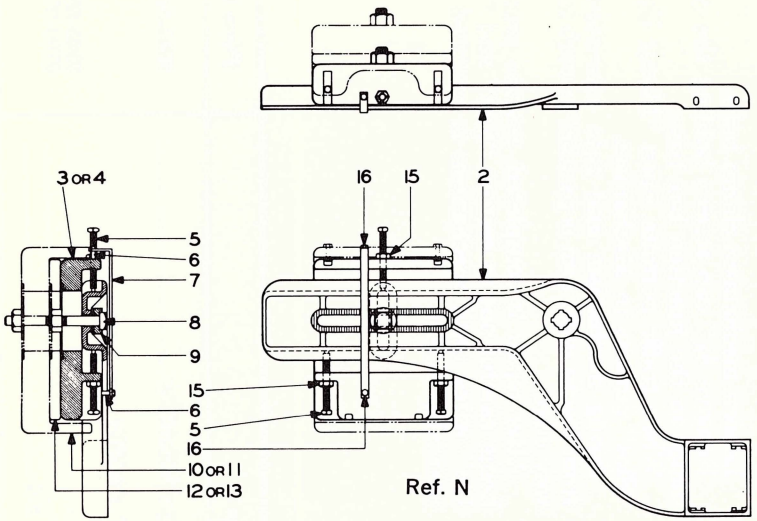

Ref. N

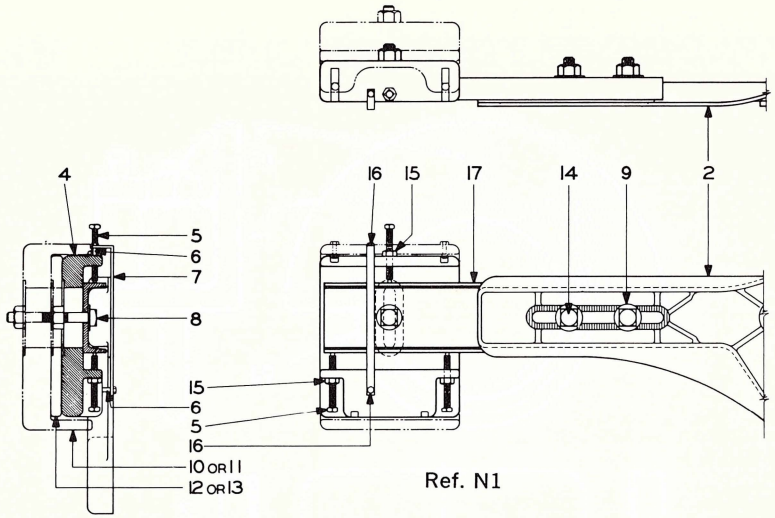

Ref. N1

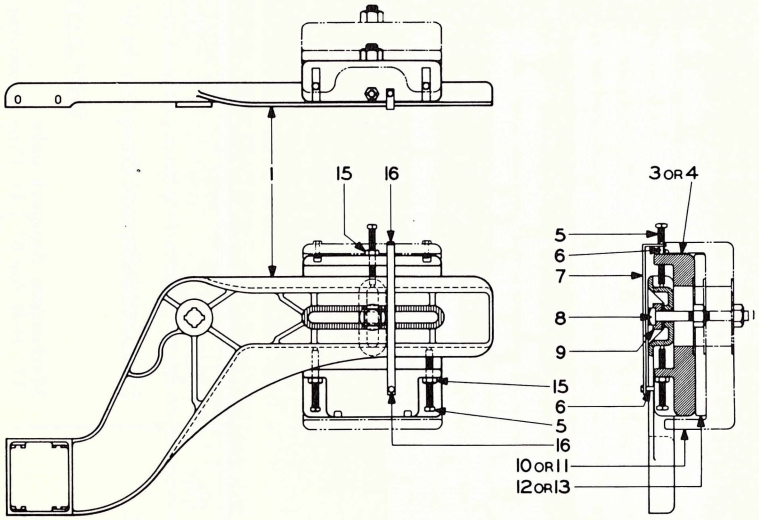

Ref. N2 & N4

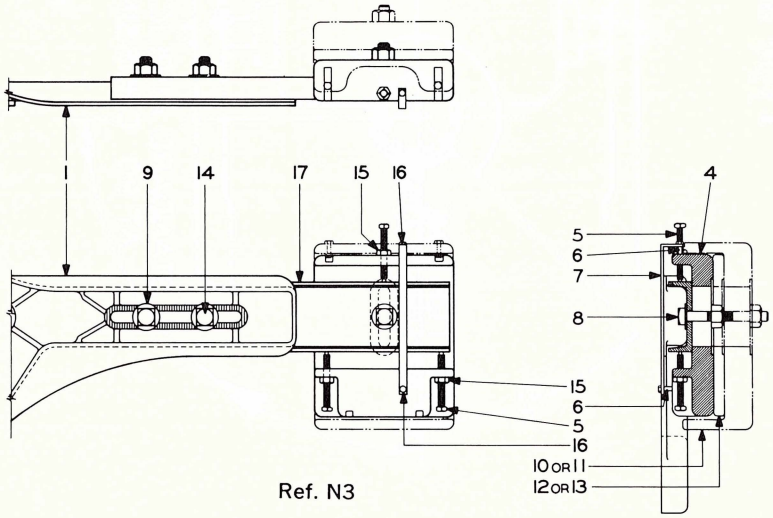

Ref. N3

Gate and Counterweight Arm For Model 10 Signals

Ref. No.	Description	Piece No.
N	Gate and Counterweight Arm Complete for roadway arms 25′ to 30′ Lg., Inclusive for left side of mechanism. Specify length of arm	3565-102L
N1	Same as Ref. N, but for 31′ to 44′ Lg. Gate Arm	3565-102L
N2	Same as Ref. N, but for Right side and for 14′ to 30′ Lg. Gate arms inclusive	3565-103R
N3	Same as Ref. N2, but for 31′ to 44′ Lg. Gate Arm	3565-103R
N4	Gate and Counterweight arm complete for sidewalk arms 18′ Lg. or less	3565-103RX
	REPLACEMENT PARTS	
1	Right Hand Counterweight Arm only	3565-103
2	Left Hand Counterweight Arm only	3565-102
3	Adjustable Counterweight Complete—85 lbs.	3562-236A
4	Adjustable Counterweight Complete—160 lbs.	3562-226A
4A	Counterweight only—160 lbs.	3562-226
5	Set Screw, 5/8″-11 x 6″ Lg., sq. hd. Dog Point Stl.	3562-211
6	Sleeve	3562-232
7	Retaining Strap	3562-233
8	Counterweight Mounting Bolt 6″ Lg. with hex. nut and plain washer	3562-182-6
8A	Same as Ref. 8, but 7″ Lg.	3562-182-7
8B	Same as Ref. 8, but 8″ Lg.	3562-182-8
8C	Same as Ref. 8, but 9″ Lg.	3562-182-9
8D	Same as Ref. 8, but 10″ Lg.	3565-182-10
9	Clamp Washer	3565-104
10	Counterweight—100 lbs.	3562-229
11	Counterweight—200 lbs.	3562-230
12	Counterweight—25 lbs.	3562-228
13	Counterweight—50 lbs.	3562-227
14	Mach. Bolt, 1″-8 x 3½″ Lg. sq. hd. stl. and 2 plain washers	
15	Hex. Nut 5/8″-11, steel	
16	Cap Screw, 3/8″-16 x 1¾″ Lg., hex. hd. stl.	
17	Counterweight Extension Arm (For Ref. N1 and N3 only)	3565-174

Gate Support Arm and Sidewalk Arm Bracket For Model 10 Signals

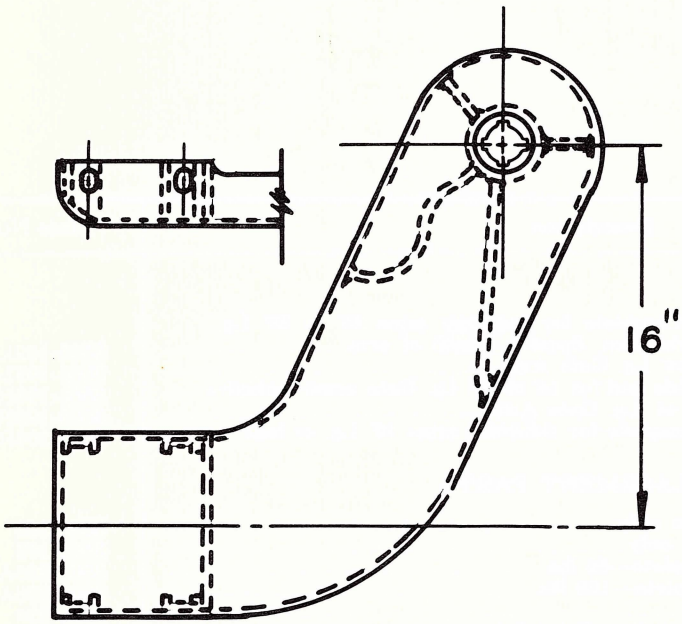

Ref. N5

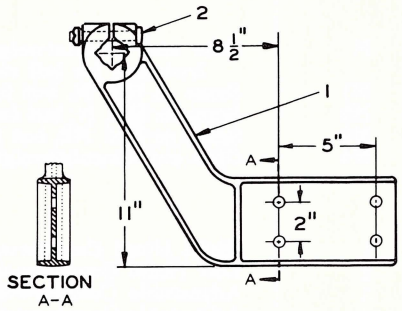

Ref. V

Ref. No.	Description	Piece No.
N5	Gate Support Arm Complete, for use with Roadway Arm 14′ to 24′ Long Inclusive	3565-101
V	Sidewalk Arm Bracket Complete, for use with Sidewalk Arm 18′ Long or Less	3565-111
	REPLACEMENT PARTS	
1	Sidewalk Arm Bracket (Casting only)	3565-111A
2	Mach. Bolt, ½″-13 x 3½″ Lg. sq. hd. stl., hex. nut and Lock Washer	

Junction Box Cross Arm For Two-Way Indication Type 960-3 and 5

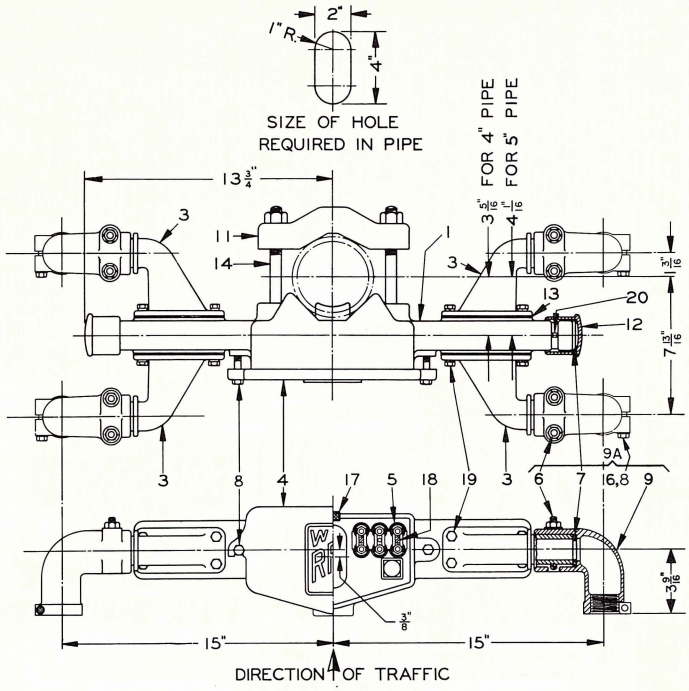

Ref. E

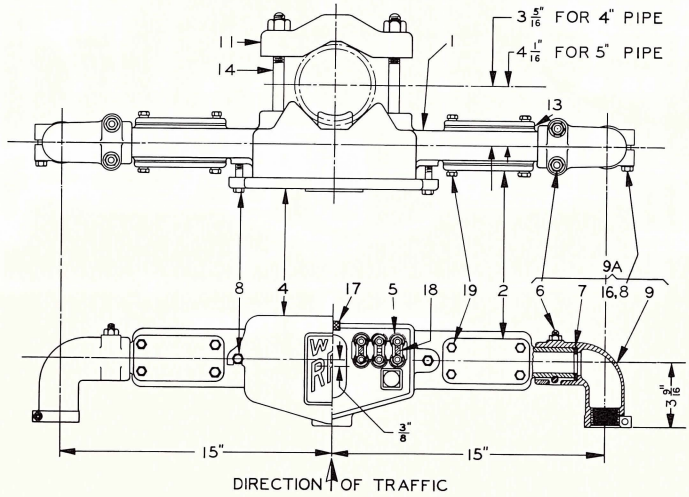

Ref. E1

Ref. No.	Description	Piece No.
E	Junction Box Cross Arm Assembly for Mounting Four 970-201 Light Units. (Specify Pipe Size)	960-5
E1	Same as Ref. E but for Two Light Units	960-3

For Replacement Parts Listing see Pages 3-44 and 3-45.

Type 960-83 Junction Box Cross Arm For One-Way Indication

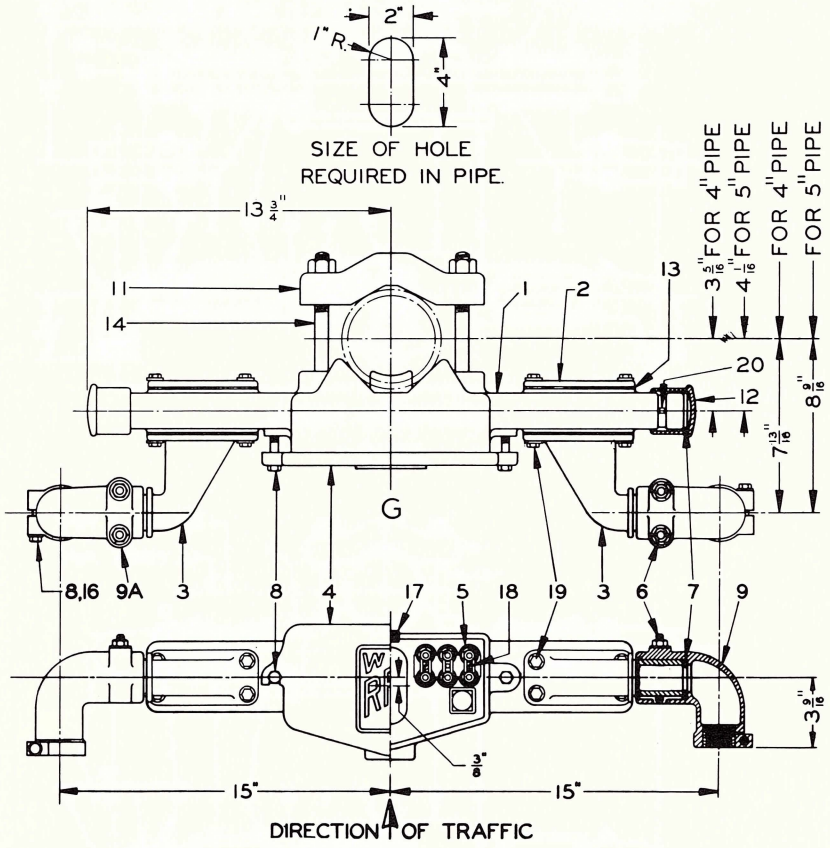

Ref. E2

Ref. No.	Description	Piece No.
E2	Junction Box Cross Arm Assembly for Mounting Two 970-201 Light Units. (Specify Pipe Size)	960-83

For Replacement Parts Listing see Pages 3-44 and 3-45.

Type 960-88 Junction Box Cross Arm For Two-Way Indication

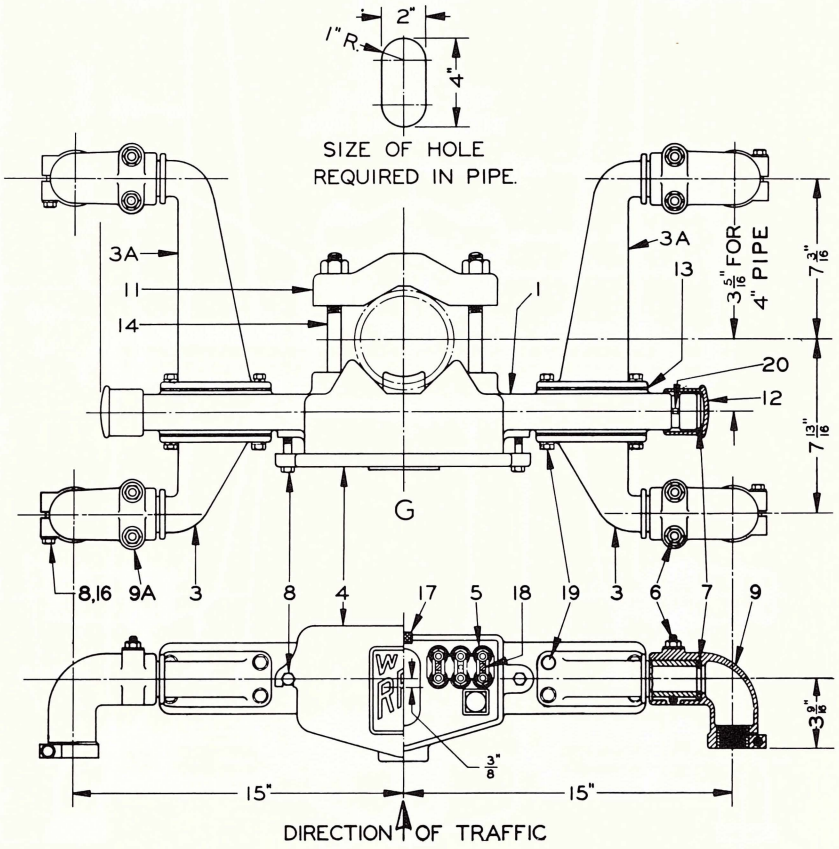

Ref. E3

Ref. No.	Description	Piece No.
E3	Junction Box Cross Arm Assembly for Mounting Four 970-201 Light Units. (Specify Pipe Size)	960-88

For Replacement Parts Listing see Pages 3-44 and 3-45.

Type 960-5XX Junction Box Cross Arm For Two-Way Indication

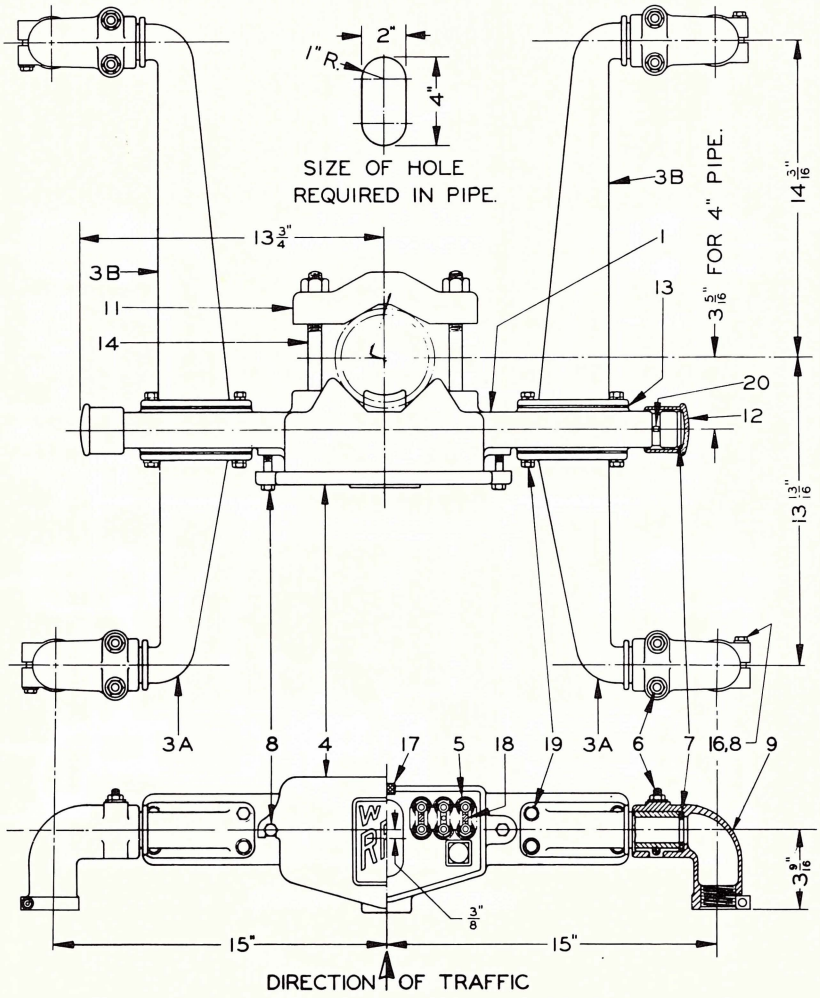

Ref. E4

Ref. No.	Description	Piece No.
E4	Junction Box Cross Arm Assembly for Mounting Four 970-201 Light Units (For 4" I.D. Pipe Mounting)	960-5XX

For Replacement Parts Listing see Pages 3-44 and 3-45.

Type 960-54 Junction Box Cross Arm For Two-Way Indication

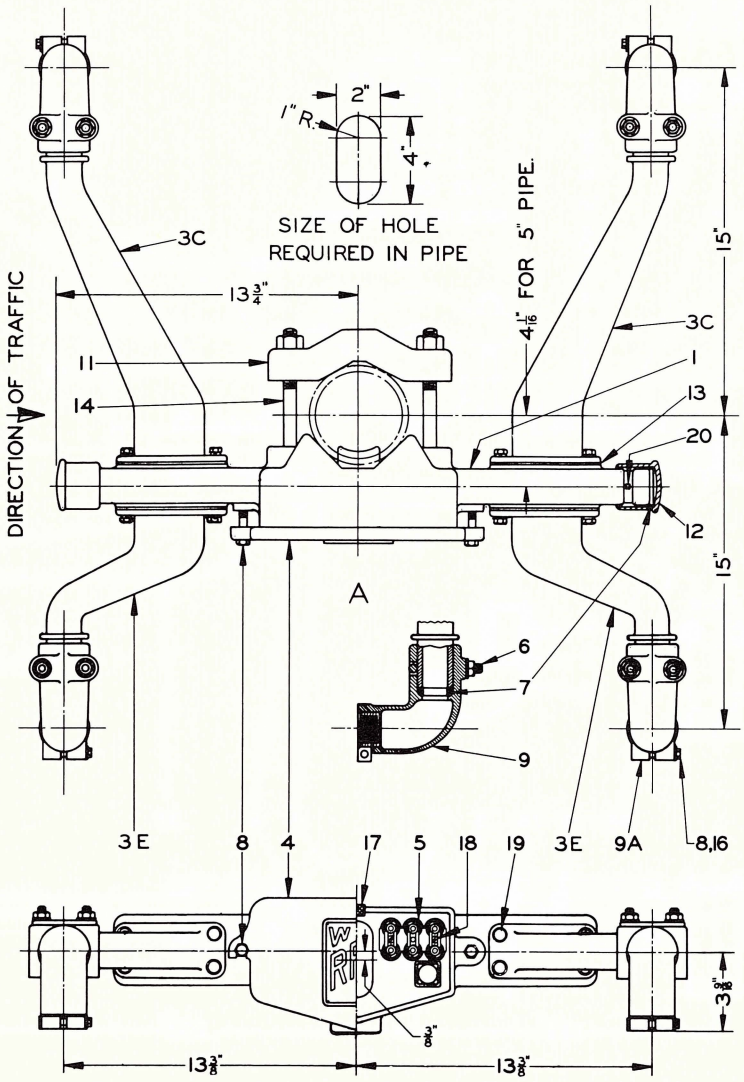

Ref. E5

Ref. No.	Description	Piece No.
E5	Junction Box Cross Arm Assembly for Mounting Four 970-201 Light Units (For 5" I.D. Pipe Mounting)	960-54

For Replacement Parts Listing see Pages 3-44 and 3-46.

Type 960-74R Junction Box Cross Arm For Two-Way Indication

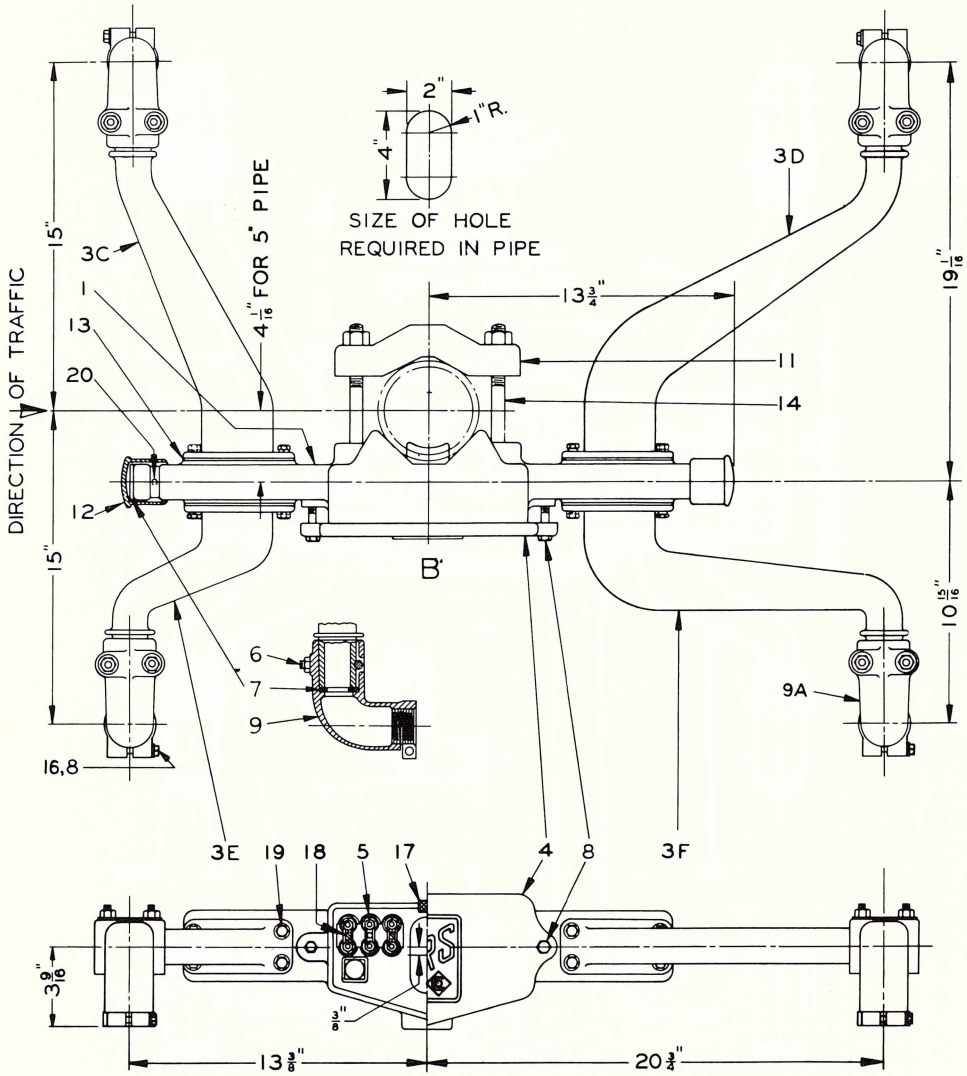

Ref. E6

Ref. No.	Description	Piece No.
E6	Junction Box Cross Arm Assembly for Mounting Four 970-201 Light Units (For 5" I.D. Pipe Mounting)	960-74R

For Replacement Parts Listing see Pages 3-44 and 3-45.

Type 960-84 Junction Box Cross Arm For Two-Way Indication

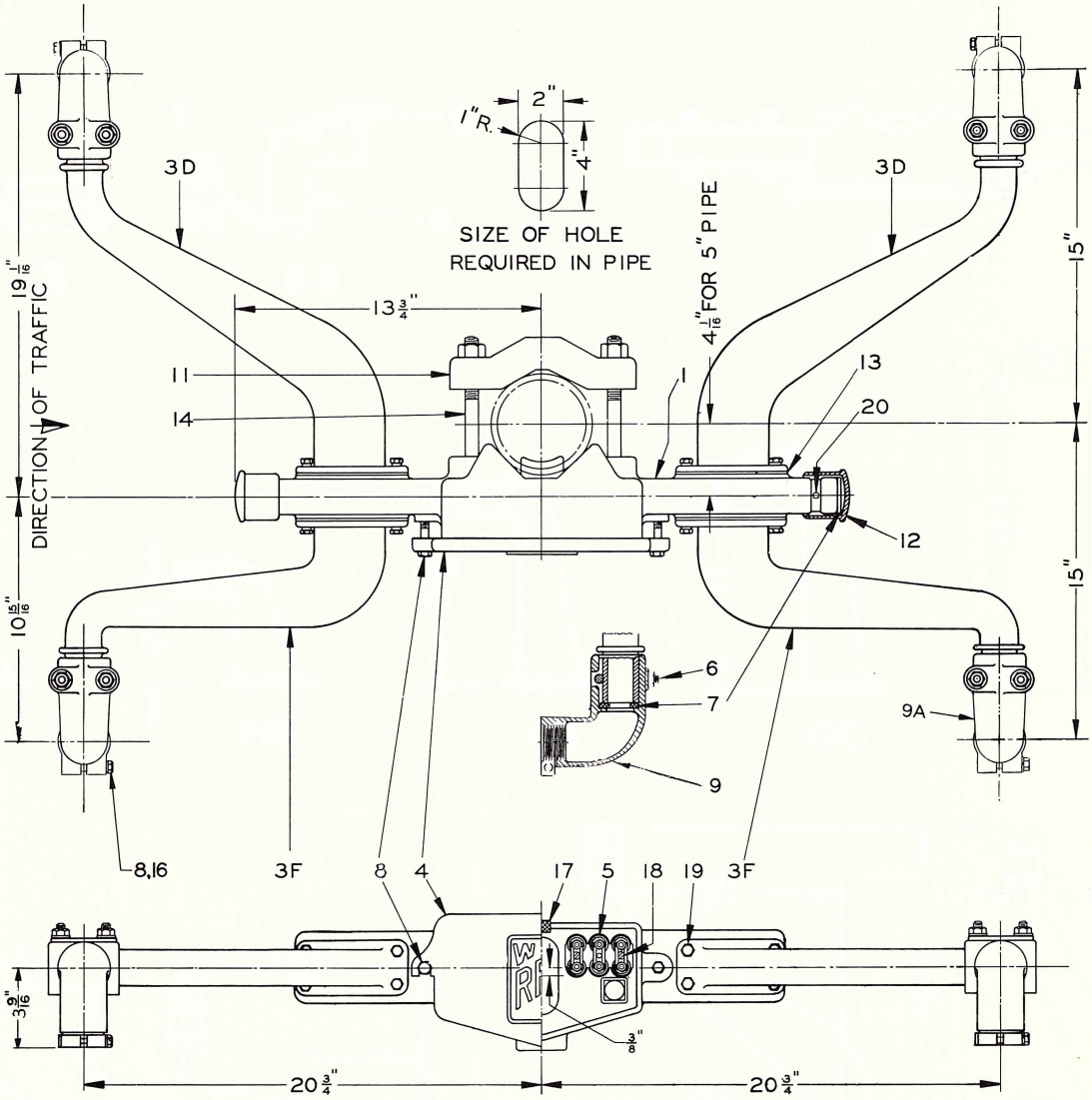

Ref. E7

Ref. No.	Description	Piece No.
E7	Junction Box Cross Arm Assembly for Mounting Four 970-201 Light Units (For 5" I.D. Pipe Mounting)	960-84

For Replacement Parts Listing see Pages 3-44 and 3-45.

Junction Box Cross Arms

REPLACEMENT PARTS LISTING FOR PAGES 3-37 TO 3-43

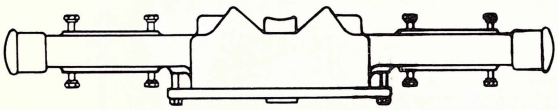

E 8

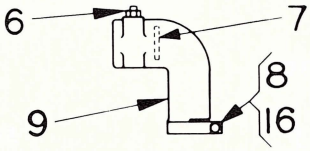

E 9

2

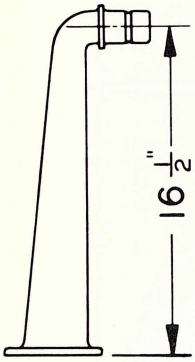

3B

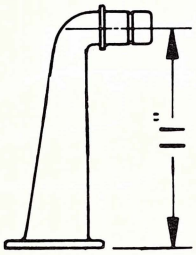

3G

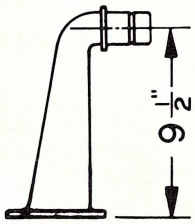

3A

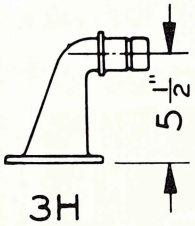

3H

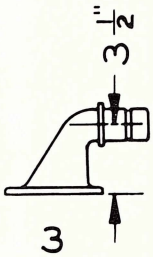

3

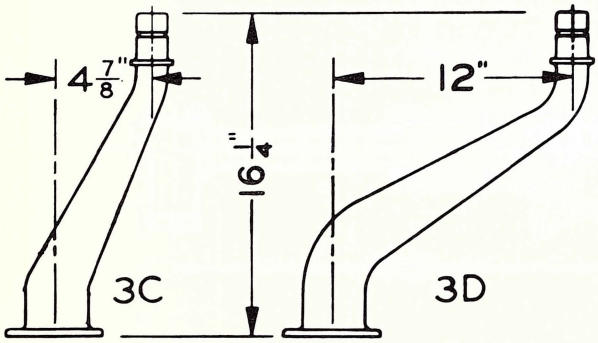

3C 3D

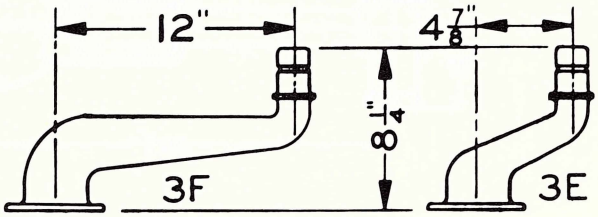

3F 3E

Junction Box Cross Arms

REPLACEMENT PARTS LISTING FOR PAGES 3-37 TO 3-43

Ref. No.	Description	Piece No.
E8	Sub-assembly of Junction Box Cross Arm (Includes Items 1, 4, 5, 7, 12, 15, 16, 18, 19 and 20)	950A-62
E9	Sub-assembly of Supporting Bracket (Includes Items 6, 7, 8, 9 and 16)	960A-163
	REPLACEMENT PARTS	
1	Junction Box Cross Arm (Casting only)	950A-22
2	Cover Plate	950A-39
3	Bracket 3½"	950A-57
3A	Bracket 9½"	950A-47
3B	Bracket 16½"	950A-46
3C	Bracket 16¼" x 4⅞"	950A-67
3D	Bracket 16¼" x 12"	950A-77
3E	Bracket 8¼" x 4⅞"	950A-66
3F	Bracket 8¼" x 12"	950A-76
3G	Bracket 11"	950A-37
3H	Bracket 5½"	950A-36
4	Cover, Complete with Packing	950A-21
5	Terminal Block, Complete	2506-106
6	"U" Bolt, ⅜"-16, Complete with Nuts	950-31
7	Gasket, Sponge Rubber	950-28
8	Cap Screw, ⅜"-16 x 2" Lg. hex. hd., stl.	
9	Supporting Bracket	960A-131
11	Adaptor Clamp	950A-34
12	Cap	950A-29
13	Gasket, Cork	950-27
14	Mach. Bolt, ⅝"-11 x 7½" Lg. sq. hd. stl. and hex. nut for 5" Pipe Mounting	
14A	Same as Ref. 14, but for 4" Pipe Mounting	
16	⅜" Lock Washer	
17	Torchwick Packing ⅜" Dia. x 27" Lg.	
18	Mach. Screw, No. 10-32 x ⅝" Lg. fil. hd., stl.	
19	Cap Screw, ⅜"-16 x ⅞" Lg. hex. hd.. stl. and Lock Washer	
20	Set Screw, ¼"-20 x ½" Lg., sq. hd. Cup Pt., stl.	

Type 2149 Junction Box Clamp Type Base

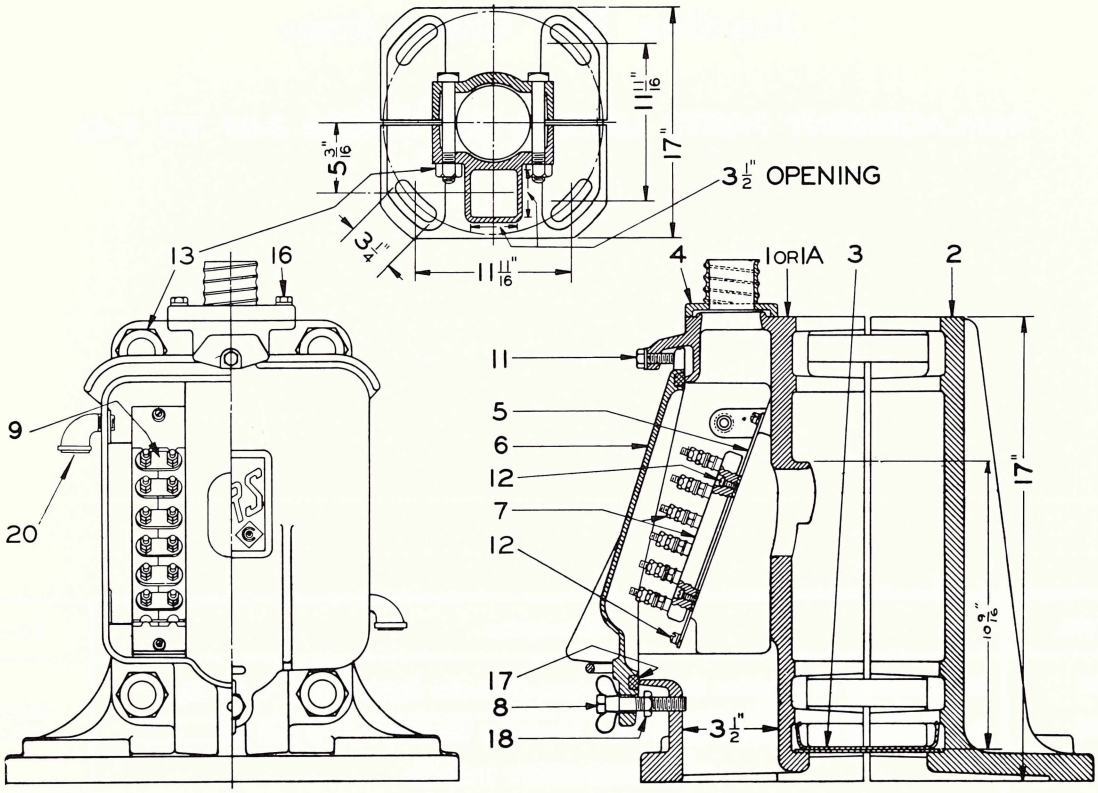

Ref. B9

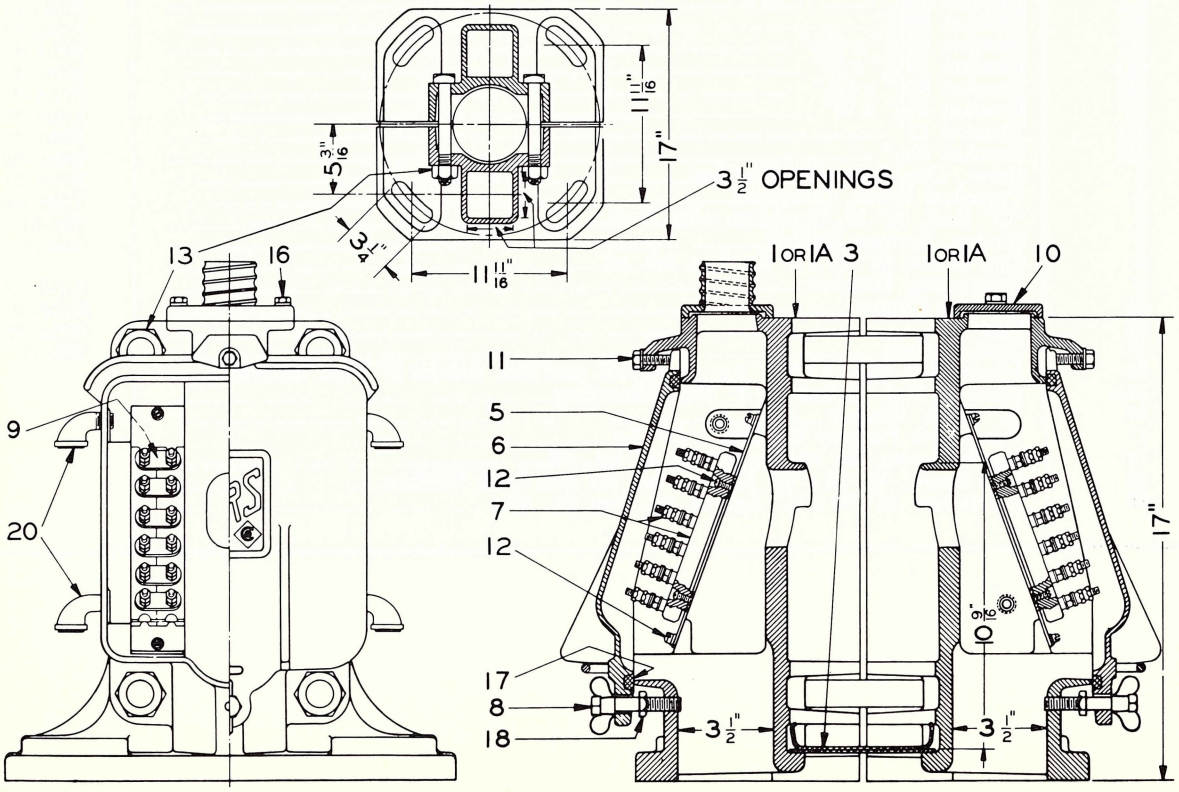

Ref. B11

Type 2149 Junction Box Clamp Type Base

Type 2149 Bases are regularly furnished with conduit flange (Ref. 4) for 1½″ flexible metalic conduit unless specified for 2″ conduit. A cover (Ref. 10A) tapped 1½″ pipe thread is furnished for "sealtite" connector.

Ref. No.	Description	Piece No.
B9	Type 2149 Split base with one Junction Box half with 24 binding posts, ventilators and conduit flange. (Cast Iron)	2149-111C
B10	Same as Ref. B9, less ventilators	2149-111
B11	Same as Ref. B9, but with two Junction Box halves	2149-112E
B12	Same as Ref. B11, less ventilators	2149-112
	REPLACEMENT PARTS	
1	Junction Box Half, (Without Terminals, Cover, Ventilators and Fittings, for Ref. B10 and B12)	2149-15
1A	Same as Ref. 1, but for Ref. B9 and B11	2149-15C
2	Split Base Half	2149-13
3	Pipe Shield	2149-24
4	Conduit Flange for 1½″ Conduit	2149-117
4A	Conduit Flange for 2″ Conduit	2149-17
5	Terminal Mounting Plate	2149-25
6	Cover with Packing Ref. 17	2149-16
7	Terminal Strip (12 post)	2508-106
8	Thumb Screw	2149-18A
9	Connector	7323-2
10	Blank Cover	2149-22
10A	Cover Plate, tapped 1½″ pipe thread	2149-22G
11	Cap Screw, ⅜″-16 x ⅞″ Lg. hex. hd. stl. and plain washer	
12	Mach. Screw, ¼″-20 x ⅝″ Lg. fil. hd. stl.	
13	Mach. Bolt, 1″-8 x 7½″ Lg. sq. hd. stl. and hex. nut	
14	Pipe Plug, ¾″ Std.	
15	Pipe Reducer Bushing, 1¼″ x ¾″ Std.	
16	Cap Screw, ⅜″-16 x 1⅛″ Lg., hex. hd., stl. and lock washer	
17	Packing, Flax or Jute, ⅜″ sq. x 3′-2½″ Lg.	
18	Hex. Jam Nut, ½″-13 Std., stl.	
19	Pipe Plug, 1¼″ Std.	
20	Ventilator	1143-16

Upper and Lower Supporting Brackets For Offset Mast Type Model 10 Signals

Type 3565-65 Type 3565-67 Type 3565-367

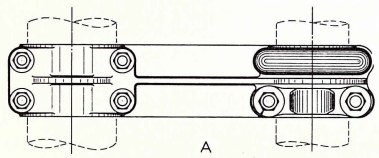

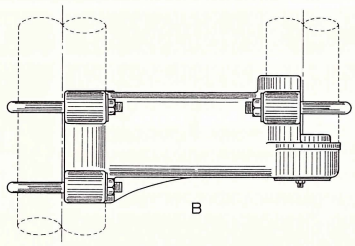

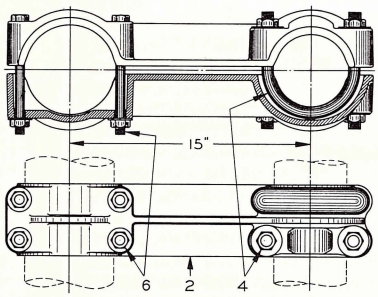

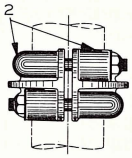

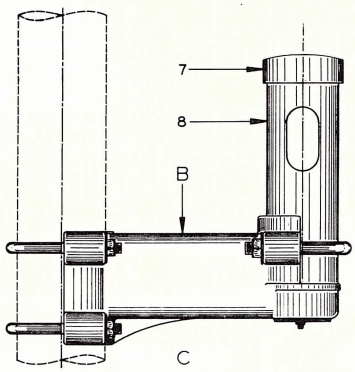

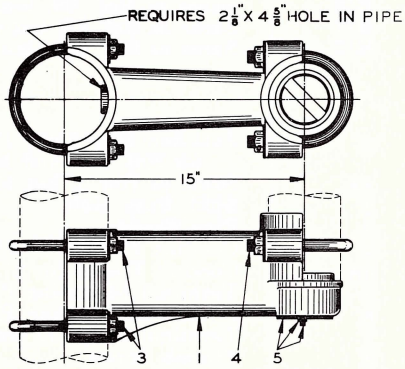

Ref. No.	Description	Piece No.
A	Upper Supporting Bracket Assembly	3565-65
B	Lower Supporting Bracket Assembly	3565-67
C	Supporting Bracket and Dowel Mast Assembly	3565-367
	REPLACEMENT PARTS	
1	Upper Bracket Casting Only	3565-69
2	Upper Bracket Casting Only	3565-68
3	"U" Bolt for 5" I.D. Pipe	1264-5
4	"U" Bolt for 4" I.D. Pipe	3565-163
5	Wire Opening Cover and Clamp Subassembly	3565-162A
6	Mach. Bolt, 5/8"-11 x 7" Lg. Sq. Hd. Steel, Hex. Steel Nut and Plain Washer	
7	Tap-on Pinnacle	110A-6
8	Dowel, 4" I.D. x 14" Lg. (May be turned in Socket to any Angle)	714-8

Upper and Lower Supporting Brackets For Offset Mast Type Model 10 Signals

Type 3565-165 Type 3565-167 Type 3565-267

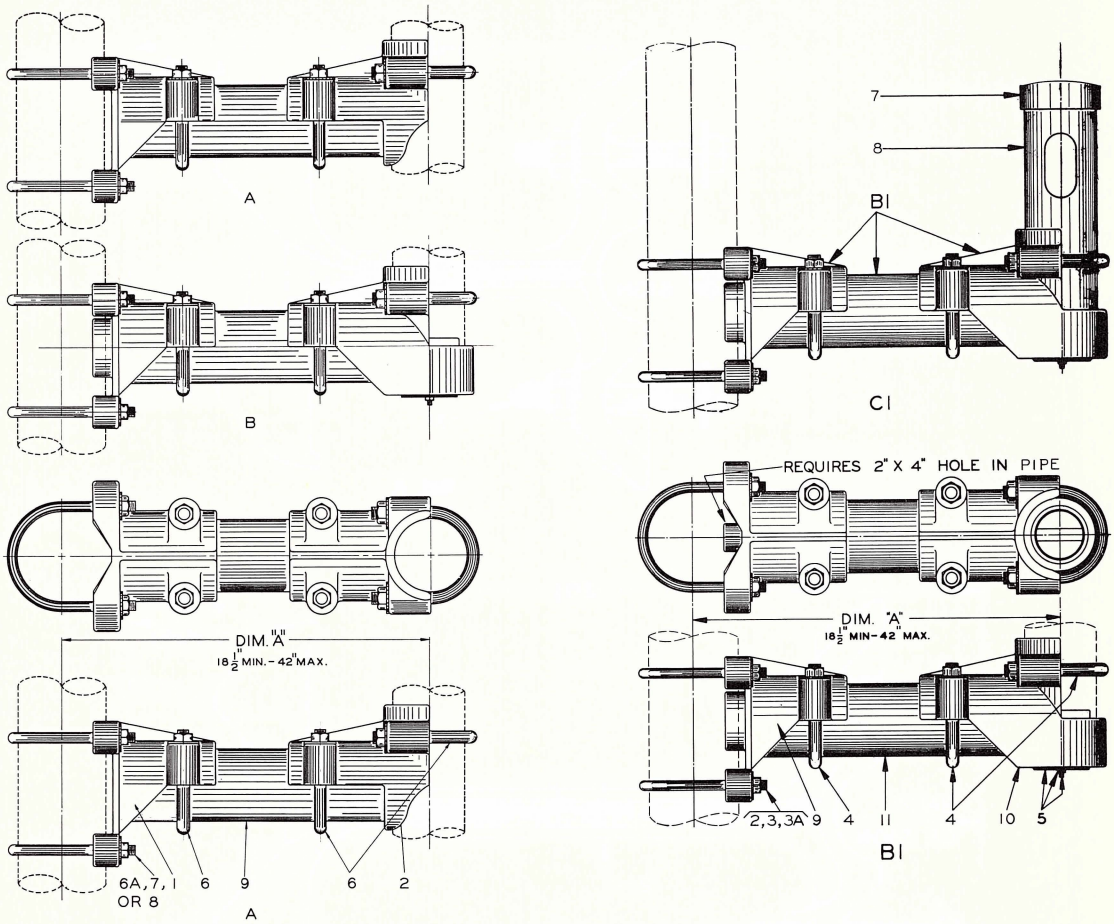

Ref. No.	Description	Piece No.
A	Upper Supporting Bracket Assembly (Specify Dimension "A" in inches)	3565-165
B	Lower Supporting Bracket Assembly (Specify Dimension "A" in inches)	3565-167
C	Supporting Bracket and Dowel Mast Assembly (Specify Dimension "A" in inches)	3565-267
	REPLACEMENT PARTS	
1	Inner Support	3565-169
2	Outer Support	3565-164
3	Inner Support	3565-168
4	Outer Support	3565-166
5	Wire Opening Cover and Clamp Sub-Assembly	3565-162A
6	"U" Bolt for 4" I.D. Pipe	3565-163
6A	"U" Bolt for 4" I.D. Pipe	1264-4
7	"U" Bolt for 5" I.D. Pipe	1264-5
8	"U" Bolt for 6" I.D. Pipe	1264-6
9	Pipe, 4" I.D. (Length as Required)	
10	Dowel, 4" I.D. x 14" Lg. (May be turned in Socket to any Angle)	714-8
11	Tap-on Pinnacle	110A-6

Extension Brackets For Crossing Signs

Type 3366-40 Type 3366-140

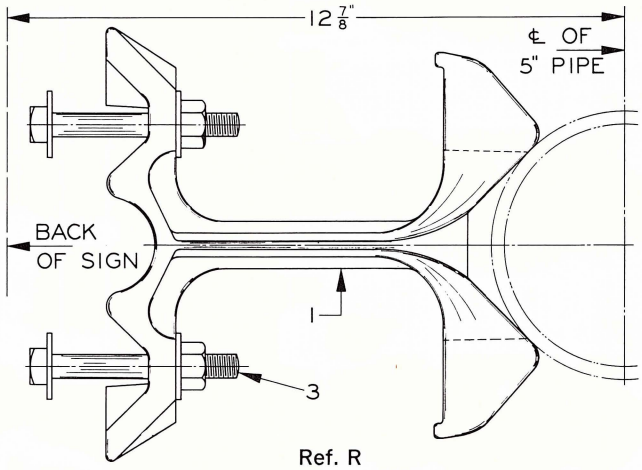

Ref. R

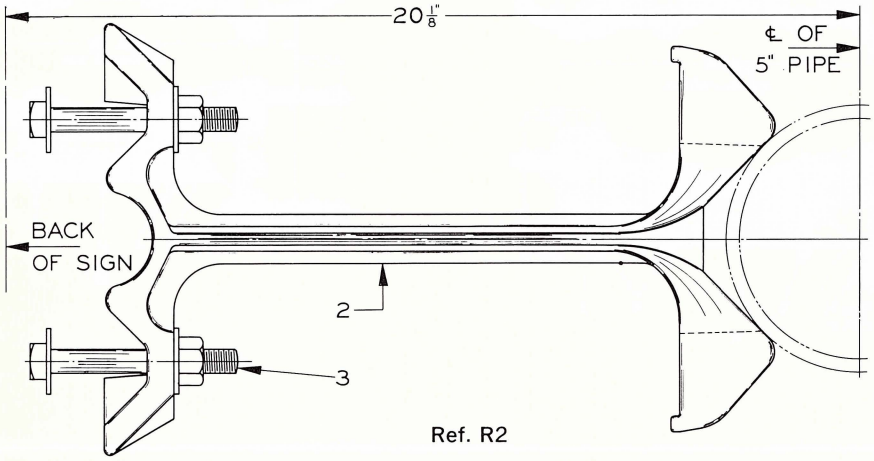

Ref. R2

Ref. No.	Description	Piece No.
R	Type 3366-40 Extension Bracket (Cast Iron) Complete with Bolts, Nuts and Washers	3366-40
R1	Same as Ref. R, but aluminum	3366A-40
R2	Type 3366-140 Extension Bracket (Cast Iron) Complete with Bolts, Nuts and Washers	3366-140
R3	Same as Ref. R2, but aluminum	3366A-140
	REPLACEMENT PARTS	
1	Extension Bracket, gray iron casting only	3366-41
1A	Same as Ref. 1, but aluminum casting	3366A-41
2	Extension Bracket, gray iron casting only	3366-141
2A	Same as Ref. 2, but aluminum casting	3366A-141
3	Mach. Bolt, ½"-13 x 4" Lg., sq. hd., stl., hex. nut and 2 Plain Washers	